STEPHEN F. AUSTIN STATE UNIVERSITY

NACOGDOCHES, TEXAS

INVITATION TO BID

FAILURE TO SIGN WILL DISQUALIFY BID

Bid No.: PLAZA RENOVATION-2019
ADDENDUM NO. 2

Due Date: 12/04/19 at 3:00 P.M.

Signature City Zip

Printed Name

VENDOR NAME AND ADDRESS

Name of Firm

Mailing Address

City State Zip

PHONE/FAX

Phone

FAX

EMAIL

Show bid opening and bid invitation number in lower left hand corner of sealed bid envelope and return sealed bids to:

Stephen F. Austin State University
P. O. Box 13030, SFA Station
2124 Wilson Drive
Nacogdoches, Texas 75962-3030
Phone (936) 468-2206
FAX (936) 468-4282 (See 2.3 reverse side)

See Instruction 2.10 on Back for Vendor ID Number
Is Vendor a State of Texas certified HUB? ☐ Yes

Delivery in _____ Days Cash Disc._____ % _____Days

Check all that apply if Preference Claimed under Rule 34 TAC 20.38

__ Supplies, materials or equipment: produced in TX/offered by TX bidders*
__ Agricultural products grown in TX
__ Agricultural products offered by TX bidders*
__ USA produced supplies, materials or equipment
__ Products produced at facilities located on formerly contaminated property
__ Products of persons with mental or physical disabilities
__ Products made of recycled, remanufactured, or environmentally sensitive materials
__ Energy efficient products
__ Rubberized asphalt paving material
__ Recycled motor oil and lubricants
__ Products and services from economically depressed or blighted areas

*By signing this bid, bidder certifies that if a Texas address is shown as the address of the bidder, bidder qualifies as a Texas resident Bidder as defined in Rule 34 TAC 20.38.

IF QUOTING OTHER THAN THE REFERENCED ITEM(S) BELOW, BROCHURE AND/OR SPECIFICATIONS SHOULD BE ENCLOSED.
ALL BIDS WILL BE CONSIDERED F.O.B. DESTINATION UNLESS OTHERWISE NOTED.

AWARD NOTICE: Stephen F. Austin State University (SFASU) reserves the right to make an award on the basis of low line item bid, low total of line items, or in any other combination that will serve the best interest of SFASU and to reject any and all bid items in the sole discretion of SFASU.

Item No.	Description	Qty. & Unit	Unit Price	Extension
	Quote price on quantity and unit of measure, extend and show total. If error in extension, unit price shall govern. Items for state use are exempt from state sales and federal excise tax. Do not include tax in your bid.			
	ADDENDUM NO. 2 **THIS ADDENDUM MUST BE ACKNOWLEDGED IN ORDER FOR THE RESPONSE TO RECEIVE CONSIDERATION. FAILURE TO ACKNOWLEDGE THE ADDENDUM WILL RESULT IN DISQUALIFICATION OF THE RESPONSE.** **SPECIFICATIONS** Reference attached cut sheets for owner supplied bollards.			

Bollard R-7591

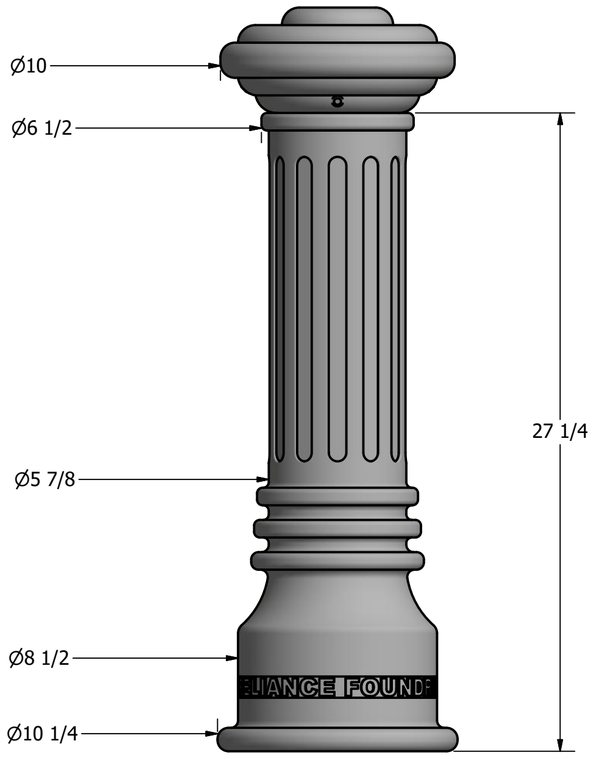

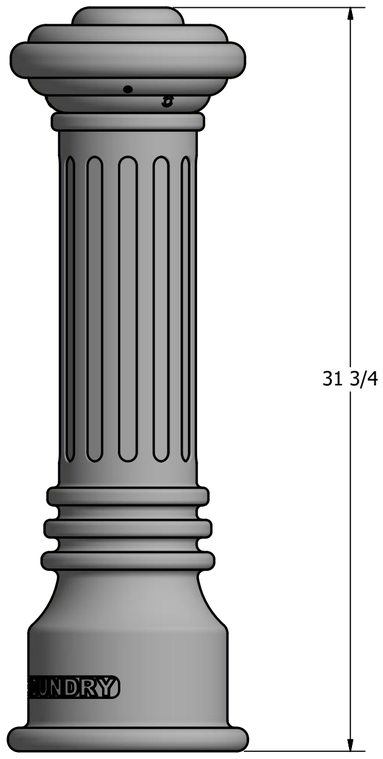

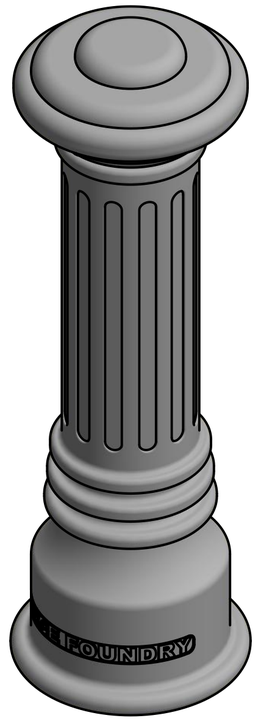

Installation Sample
with 5/16" Chain Accessories

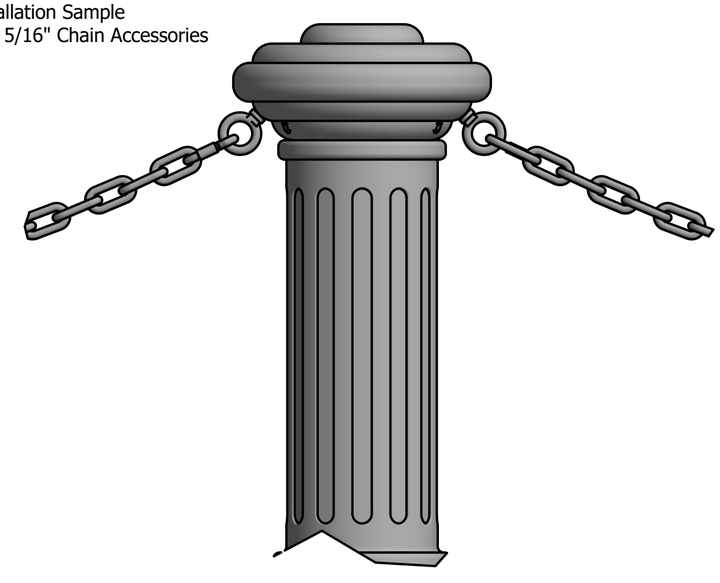

Bollard Chain Eye 3/8"
(Powder Coated)

Quick Link Connector 5/16"
(Powder Coated)

Bollard Chain 5/16"
(Powder Coated)

General Description:

The R-7591 Decorative Bollard features a classic design, suitable for traditional and contemporary environments. R-7591 bollards are made from a versatile ductile iron, featuring decorative fluting and corniced top casting for simple but elegant stature. Bollard surfaces are protected by a durable powder coating, available in 6 standard colors, to prevent wear and corrosion. Use as fixed, stand-alone bollards or cover impact-resistant security posts.

Specifications:

Height: 31 3/4"
Base Diameter: 10 1/4"
Weight: 79 lbs (Bollard Only)
Material: Ductile Iron
Max. Interior Security Post Size:
4 1/2" x 25" (Diameter x Height)

Finish Options:

⊙ Polyester Powdercoated

See Reliance Foundry's standard color options at:
www.reliance-foundry.com/bollard/colors-bollards

Installation Options:

- ○ Fixed - Anchor Casting in New Concrete (see sheet 2 of 12)
- ○ Fixed - Concrete Insert Anchor in Existing Concrete (see sheet 3 of 12)
- ○ Fixed - Adhesive Anchor in Existing Concrete (see sheet 4 of 12)
- ○ Fixed - Anchor Casting with Concrete Form (see sheet 5 of 12)
- ○ Post Cover - New Post in New Concrete (see sheet 6 of 12)
- ○ Post Cover - New Post in Existing Concrete (see sheet 7 of 12)
- ○ Post Cover - Existing Post with Adhesive Anchor (see sheet 8 of 12)
- ○ Post Cover - Existing Post with Concrete Anchor (see sheet 9 of 12)
- ○ Removable - Anchor Casting in New Concrete (see sheet 10 of 12)
- ○ Removable - Concrete Insert Anchor in Existing Concrete (see sheet 11 of 12)
- ○ Removable - Premium Retractable in New Concrete (see sheet 12 of 12)

For more information on bollard post installation, please visit:
www.reliance-foundry.com/bollard/installation-bollards

Care and Maintenance:

Reliance's line of bollards are finished with a long-lasting powder-coating. Proper care and maintenance are required. Regularly-performed inspections and routine cleaning will ensure that a bollard retains its aesthetic appeal and does not become damaged by the elements.

See Reliance Foundry's maintenance guide at:
www.reliance-foundry.com/bollard/maintenance-bollards

Optional Accessories:

- ○ Chain Eye
- ○ Quick link
- ○ Chain (5/16")
- ○ Padlock, Brass (1 3/4")
- ○ Padlock, Stainless Steel (2")

See Reliance Foundry's optional accessories at:
www.reliance-foundry.com/bollard/accessories-bollards

RELIANCE FOUNDRY
SINCE 1925
Unit 207, 6450 - 148 Street, Surrey, BC V3S 7G7, Canada
1-877-789-3245 info@reliance-foundry.com
www.reliance-foundry.com

TITLE

Bollard R-7591

SIZE		DWG NO	REV
C		R7591	C4

NOT TO SCALE | SHEET 1 OF 12

COPYRIGHT RESERVED THIS PLAN DRAWING AND DESIGN ARE, AND AT ALL TIMES REMAIN, THE EXCLUSIVE PROPERTY OF RELIANCE FOUNDRY CO. LTD.

Bollard R-7591

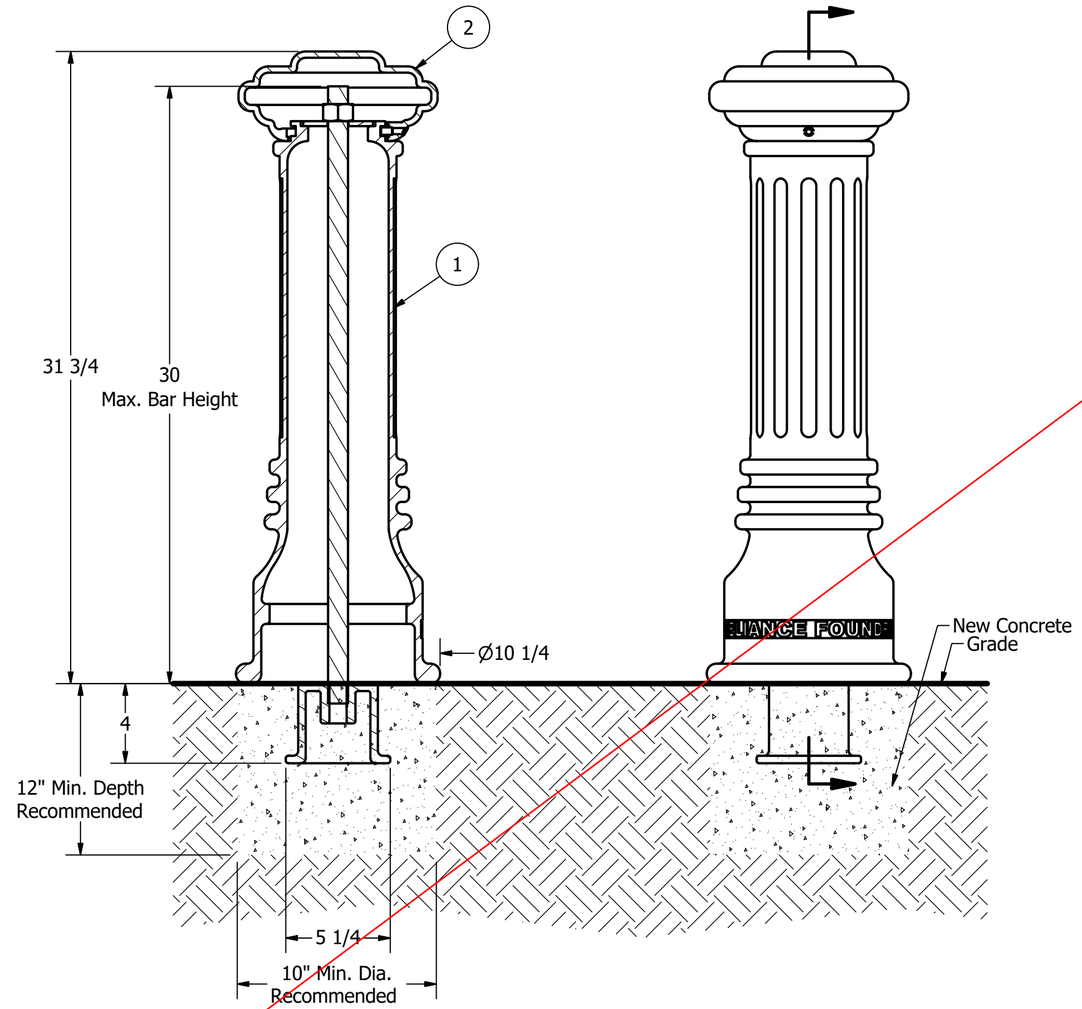

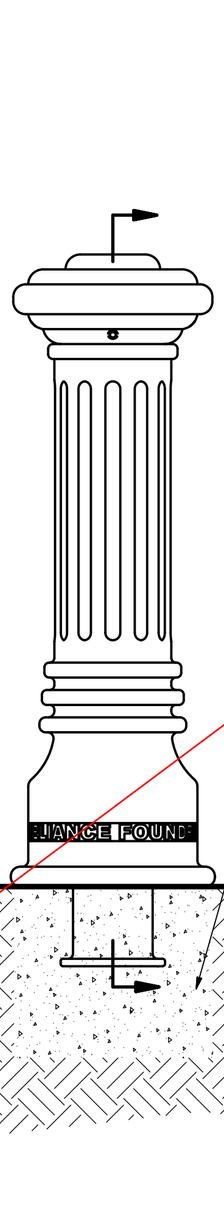

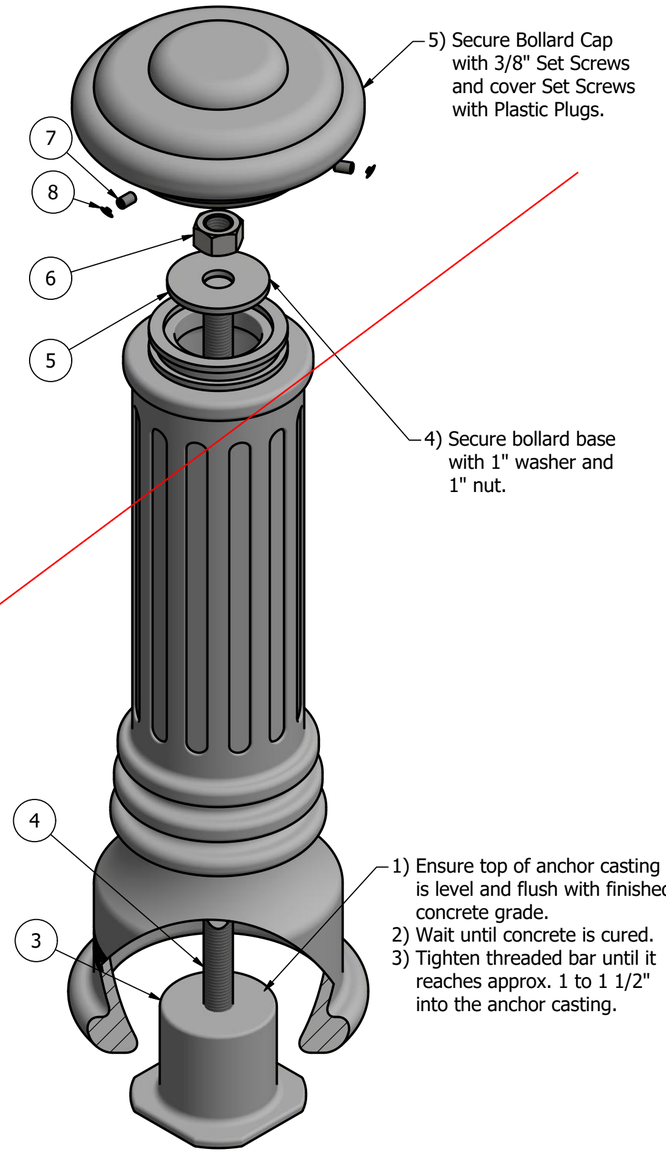

Notes:
1) Bollard post is provided as shown. Concrete, foundation and/or installation ordered separately or provided by others.
2) Minimum foundation sizes depend on local soil conditions, weather conditions, and engineering requirements.
3) Dimensions provided herein is for reference only. Please consult Reliance Foundry sales professionals if any dimension is critical to your particular installation.
4) Reliance Foundry reserves the right to amend design and specifications without prior notice for product improvement.

Tools needed:
1) Measuring tape
2) 1 1/2" wrench
3) 3/16" hex key

PARTS LIST

ITEM	QTY	PART NUMBER	DESCRIPTION	MATERIAL	WEIGHT
1	1	R7591B	R7591 Base	Ductile Iron Powder Coated	60 lbs
2	1	R7591C	R7591 Cap	Ductile Iron Powder Coated	19 lbs
3	1	R7500AN 1"	R7500 Anchor Casting 1"	Ductile Iron Hot Dip Galvanized	8 3/8 lbs
4	1	R7500BAR 1"	R7500 Threaded Bar 1" x 31"	Steel Plated	6 3/4 lbs
5	1	Washer 1" OD 3 1/2"	Washer 1" OD 3 1/2" Thick 1/4"	Steel Plated	5/8 lbs
6	1	Hex Nut 1"	Hex Nut 1" - requires 1 1/2" wrench	Steel Plated	1/4 lbs
7	3	Hexagon Socket Set Screw 3/8" x 5/8"	Hexagon Socket Set Screw 3/8" x 5/8" - requires 3/16" hex key	Stainless Steel	
8	3	Polyethylene Plug 3/8"	Polyethylene Plug 3/8"	LDPE Black	

General Description:

The R-7591 Decorative Bollard features a classic design, suitable for traditional and contemporary environments. R-7591 bollards are made from a versatile ductile iron, featuring decorative fluting and corniced top casting for simple but elegant stature. Bollard surfaces are protected by a durable powder coating, available in 6 standard colors, to prevent wear and corrosion. Use as fixed, stand-alone bollards or cover impact-resistant security posts.

Specifications:

Height: 31 3/4"
Base Diameter: 10 1/4"
Weight: 79 lbs (Bollard Only)
Material: Ductile Iron
Max. Interior Security Post Size:
4 1/2" x 25" (Diameter x Height)

Finish Options:

⊙ Polyester Powdercoated

See Reliance Foundry's standard color options at:
www.reliance-foundry.com/bollard/colors-bollards

Installation Options:

⊙ Fixed - Anchor Casting in New Concrete (see sheet 2 of 12)
○ Fixed - Concrete Insert Anchor in Existing Concrete (see sheet 3 of 12)
○ Fixed - Adhesive Anchor in Existing Concrete (see sheet 4 of 12)
○ Fixed - Anchor Casting with Concrete Form (see sheet 5 of 12)
○ Post Cover - New Post in New Concrete (see sheet 6 of 12)
○ Post Cover - New Post in Existing Concrete (see sheet 7 of 12)
○ Post Cover - Existing Post with Adhesive Anchor (see sheet 8 of 12)
○ Post Cover - Existing Post with Concrete Anchor (see sheet 9 of 12)
○ Removable - Anchor Casting in New Concrete (see sheet 10 of 12)
○ Removable - Concrete Insert Anchor in Existing Concrete (see sheet 11 of 12)
○ Removable - Premium Retractable in New Concrete (see sheet 12 of 12)

For more information on bollard post installation, please visit:
www.reliance-foundry.com/bollard/installation-bollards

Care and Maintenance:

Reliance's line of bollards are finished with a long-lasting powder-coating. Proper care and maintenance are required. Regularly-performed inspections and routine cleaning will ensure that a bollard retains its aesthetic appeal and does not become damaged by the elements.

See Reliance Foundry's maintenance guide at:
www.reliance-foundry.com/bollard/maintenance-bollards

RELIANCE FOUNDRY
SINCE 1925
Unit 207, 6450 - 148 Street, Surrey, BC V3S 7G7, Canada
1-877-789-3245 info@reliance-foundry.com
www.reliance-foundry.com

TITLE
Bollard R-7591

SIZE		DWG NO	REV
C		R7591	C4

NOT TO SCALE | SHEET 2 OF 12

COPYRIGHT RESERVED THIS PLAN DRAWING AND DESIGN ARE, AND AT ALL TIMES REMAIN, THE EXCLUSIVE PROPERTY OF RELIANCE FOUNDRY CO. LTD.

Bollard R-7591

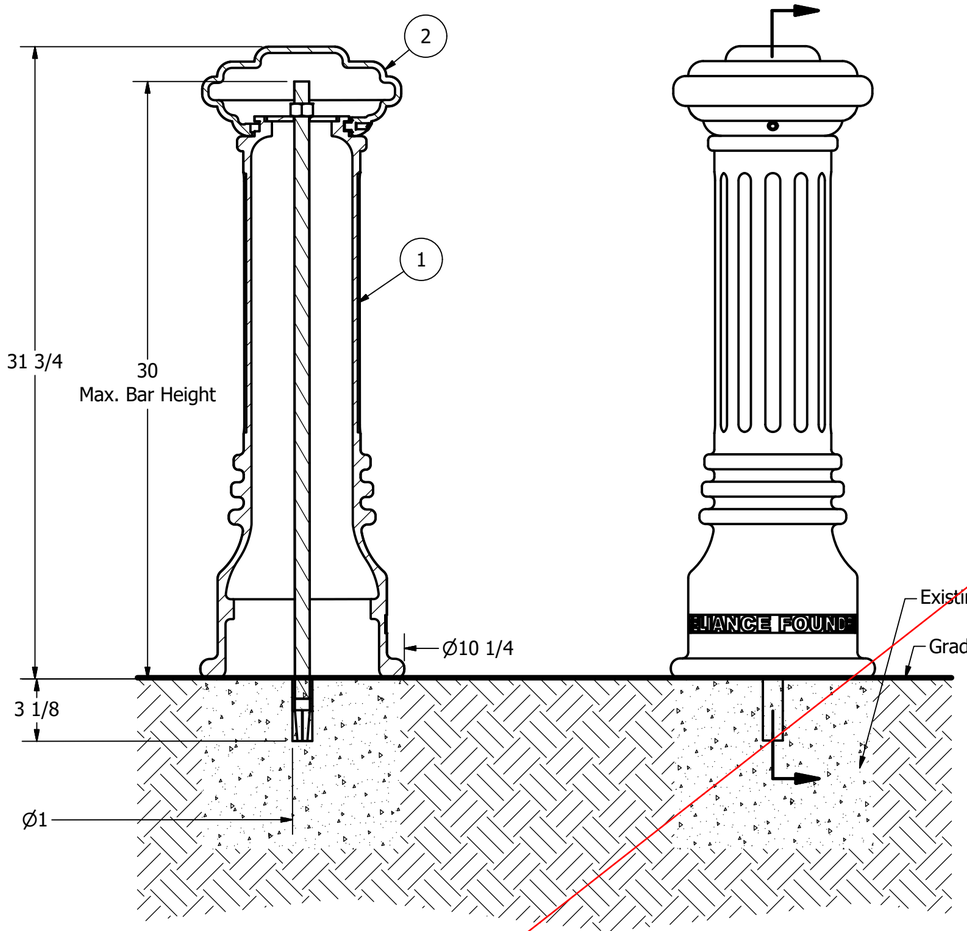

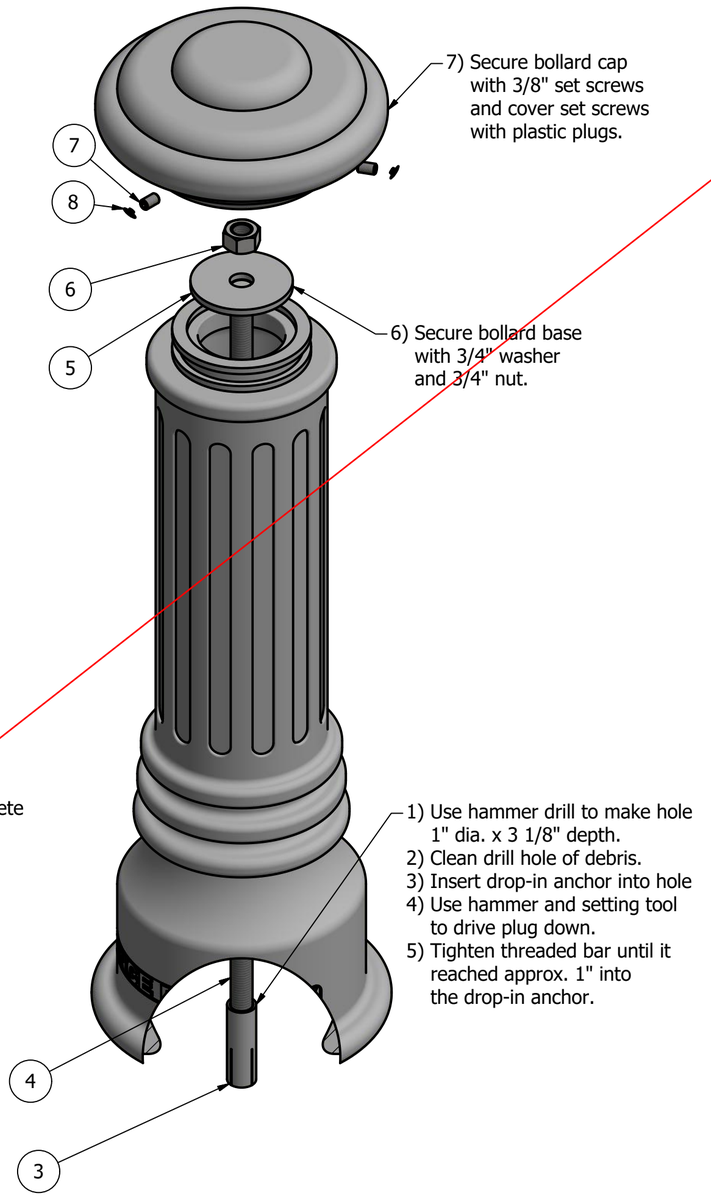

General Description:

The R-7591 Decorative Bollard features a classic design, suitable for traditional and contemporary environments. R-7591 bollards are made from a versatile ductile iron, featuring decorative fluting and corniced top casting for simple but elegant stature. Bollard surfaces are protected by a durable powder coating, available in 6 standard colors, to prevent wear and corrosion. Use as fixed, stand-alone bollards or cover impact-resistant security posts.

Specifications:

Height: 31 3/4"
Base Diameter: 10 1/4"
Weight: 79 lbs (Bollard Only)
Material: Ductile Iron
Max. Interior Security Post Size:
4 1/2" x 25" (Diameter x Height)

Finish Options:

⊙ Polyester Powdercoated

See Reliance Foundry's standard color options at:
www.reliance-foundry.com/bollard/colors-bollards

Installation Options:

- ○ Fixed - Anchor Casting in New Concrete (see sheet 2 of 12)
- ⊙ Fixed - Concrete Insert Anchor in Existing Concrete (see sheet 3 of 12)
- ○ Fixed - Adhesive Anchor in Existing Concrete (see sheet 4 of 12)
- ○ Fixed - Anchor Casting with Concrete Form (see sheet 5 of 12)
- ○ Post Cover - New Post in New Concrete (see sheet 6 of 12)
- ○ Post Cover - New Post in Existing Concrete (see sheet 7 of 12)
- ○ Post Cover - Existing Post with Adhesive Anchor (see sheet 8 of 12)
- ○ Post Cover - Existing Post with Concrete Anchor (see sheet 9 of 12)
- ○ Removable - Anchor Casting in New Concrete (see sheet 10 of 12)
- ○ Removable - Concrete Insert Anchor in Existing Concrete (see sheet 11 of 12)
- ○ Removable - Premium Retractable in New Concrete (see sheet 12 of 12)

For more information on bollard post installation, please visit:
www.reliance-foundry.com/bollard/installation-bollards

Care and Maintenance:

Reliance's line of bollards are finished with a long-lasting powder-coating. Proper care and maintenance are required. Regularly-performed inspections and routine cleaning will ensure that a bollard retains its aesthetic appeal and does not become damaged by the elements.

See Reliance Foundry's maintenance guide at:
www.reliance-foundry.com/bollard/maintenance-bollards

Notes:
1) Bollard post is provided as shown. Concrete, foundation and/or installation ordered separately or provided by others.
2) Minimum foundation sizes depend on local soil conditions, weather conditions, and engineering requirements.
3) Dimensions provided herein is for reference only. Please consult Reliance Foundry sales professionals if any dimension is critical to your particular installation.
4) Reliance Foundry reserves the right to amend design and specifications without prior notice for product improvement.

Tools needed:
1) Measuring tape
2) 1 1/8" wrench
3) 3/16" hex key
4) Hammer drill
5) 1" Masonry drill bit
6) Hammer
7) Drop-in concrete insert setting tool

PARTS LIST

ITEM	QTY	PART NUMBER	DESCRIPTION	MATERIAL	WEIGHT
1	1	R7591B	R7591 Base	Ductile Iron Powder Coated	60 lbs
2	1	R7591C	R7591 Cap	Ductile Iron Powder Coated	19 lbs
3	1	Drop-in Concrete Insert 3/4"	Drop-in Concrete Insert 3/4" - requires 1" x 3 1/8" hole (dia. x depth)	Steel Plated	1/2 lbs
4	1	R7500BAR 3/4"	R7500 Threaded Bar 3/4" x 31"	Steel Plated	3 1/4 lbs
5	1	Washer 3/4" OD 3 1/2"	Washer 3/4" OD 3 1/2" Thick 1/4"	Steel Plated	5/8 lbs
6	1	Hex Nut 3/4"	Hex Nut 3/4" - requires 1 1/8" wrench	Steel Plated	1/8 lbs
7	3	Hexagon Socket Set Screw 3/8" x 5/8"	Hexagon Socket Set Screw 3/8" x 5/8" - requires 3/16" hex key	Stainless Steel	
8	3	Polyethylene Plug 3/8"	Polyethylene Plug 3/8"	LDPE Black	

COPYRIGHT RESERVED THIS PLAN DRAWING AND DESIGN ARE, AND AT ALL TIMES REMAIN, THE EXCLUSIVE PROPERTY OF RELIANCE FOUNDRY CO. LTD.

RELIANCE FOUNDRY
SINCE 1925
Unit 207, 6450 - 148 Street, Surrey, BC V3S 7G7, Canada
1-877-789-3245 info@reliance-foundry.com
www.reliance-foundry.com

TITLE
Bollard R-7591

SIZE		DWG NO	REV
C		R7591	C4

NOT TO SCALE | SHEET 3 OF 12

Bollard R-7591

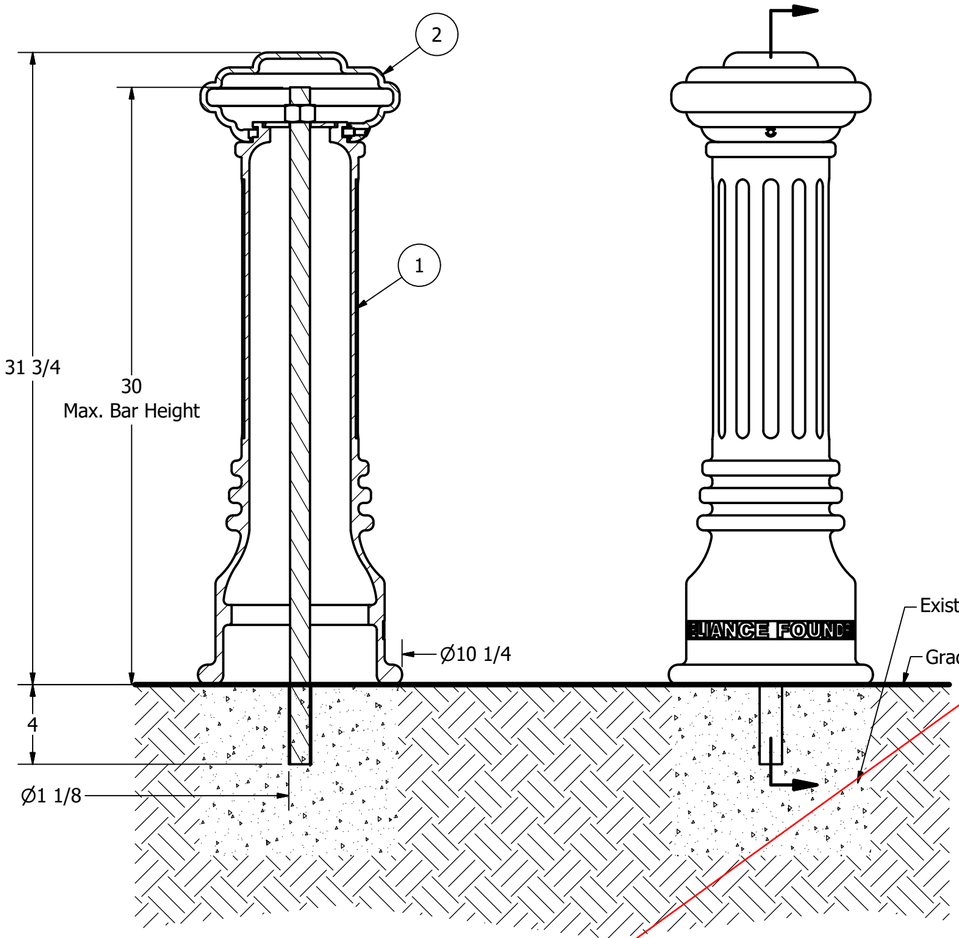

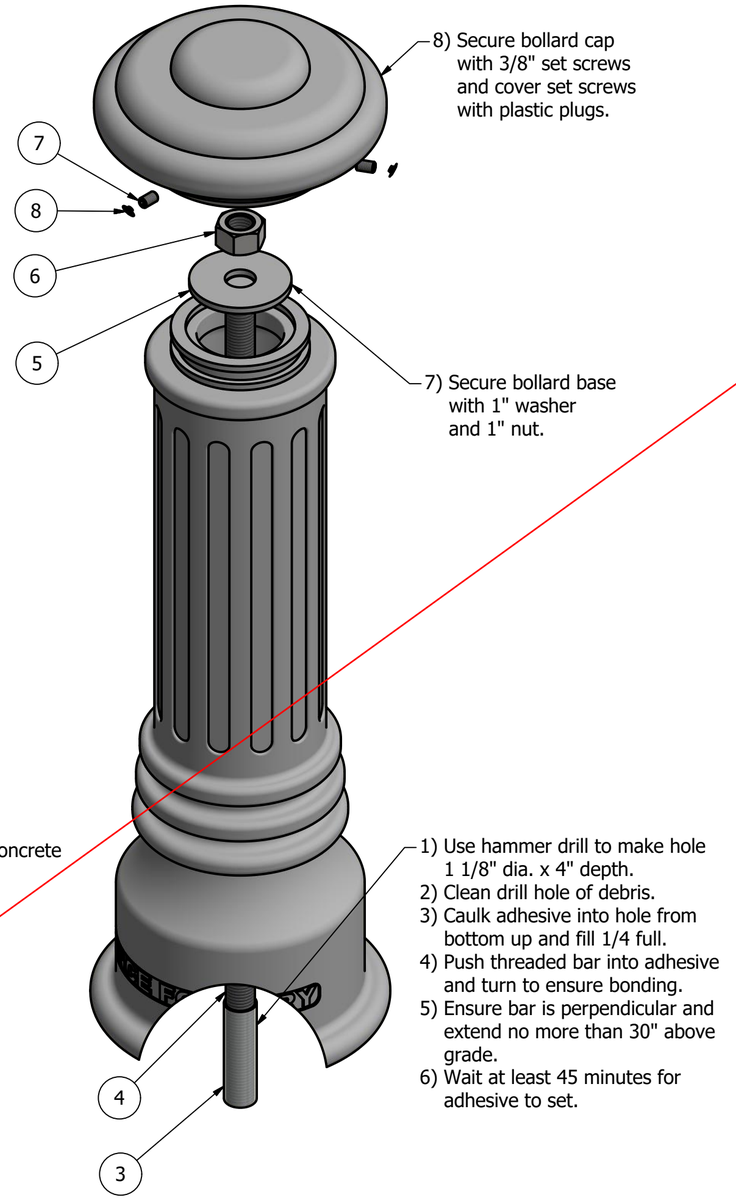

General Description:

The R-7591 Decorative Bollard features a classic design, suitable for traditional and contemporary environments. R-7591 bollards are made from a versatile ductile iron, featuring decorative fluting and corniced top casting for simple but elegant stature. Bollard surfaces are protected by a durable powder coating, available in 6 standard colors, to prevent wear and corrosion. Use as fixed, stand-alone bollards or cover impact-resistant security posts.

Specifications:

Height: 31 3/4"
Base Diameter: 10 1/4"
Weight: 79 lbs (Bollard Only)
Material: Ductile Iron
Max. Interior Security Post Size:
4 1/2" x 25" (Diameter x Height)

Finish Options:

⊙ Polyester Powdercoated

See Reliance Foundry's standard color options at:
www.reliance-foundry.com/bollard/colors-bollards

Installation Options:

○ Fixed - Anchor Casting in New Concrete (see sheet 2 of 12)
○ Fixed - Concrete Insert Anchor in Existing Concrete (see sheet 3 of 12)
⊙ Fixed - Adhesive Anchor in Existing Concrete (see sheet 4 of 12)
○ Fixed - Anchor Casting with Concrete Form (see sheet 5 of 12)
○ Post Cover - New Post in New Concrete (see sheet 6 of 12)
○ Post Cover - New Post in Existing Concrete (see sheet 7 of 12)
○ Post Cover - Existing Post with Adhesive Anchor (see sheet 8 of 12)
○ Post Cover - Existing Post with Concrete Anchor (see sheet 9 of 12)
○ Removable - Anchor Casting in New Concrete (see sheet 10 of 12)
○ Removable - Concrete Insert Anchor in Existing Concrete (see sheet 11 of 12)
○ Removable - Premium Retractable in New Concrete (see sheet 12 of 12)

For more information on bollard post installation, please visit:
www.reliance-foundry.com/bollard/installation-bollards

Care and Maintenance:

Reliance's line of bollards are finished with a long-lasting powder-coating. Proper care and maintenance are required. Regularly-performed inspections and routine cleaning will ensure that a bollard retains its aesthetic appeal and does not become damaged by the elements.

See Reliance Foundry's maintenance guide at:
www.reliance-foundry.com/bollard/maintenance-bollards

Notes:
1) Bollard post is provided as shown. Concrete, foundation and/or installation ordered separately or provided by others.
2) Minimum foundation sizes depend on local soil conditions, weather conditions, and engineering requirements.
3) Dimensions provided herein is for reference only. Please consult Reliance Foundry sales professionals if any dimension is critical to your particular installation.
4) Reliance Foundry reserves the right to amend design and specifications without prior notice for product improvement.

Tools needed:
1) Measuring tape
2) 1 1/2" wrench
3) 3/16" hex key
4) Hammer drill
5) 1 1/8" Masonry drill bit
6) Caulking gun and utility knife

PARTS LIST

ITEM	QTY	PART NUMBER	DESCRIPTION	MATERIAL	WEIGHT
1	1	R7591B	R7591 Base	Ductile Iron Powder Coated	60 lbs
2	1	R7591C	R7591 Cap	Ductile Iron Powder Coated	19 lbs
3	1	Adhesive Anchor	AC100+ Gold Adhesive Anchoring System	Vinylester Adhesive Mortar	5/8 lbs
4	1	R7500BAR 1"	R7500 Threaded Bar 1" x 34"	Steel Plated	6 1/4 lbs
5	1	Washer 1" OD 3 1/2"	Washer 1" OD 3 1/2" Thick 1/4"	Steel Plated	5/8 lbs
6	1	Hex Nut 1"	Hex Nut 1" - requires 1 1/2" wrench	Steel Plated	1/4 lbs
7	3	Hexagon Socket Set Screw 3/8" x 5/8"	Hexagon Socket Set Screw 3/8" x 5/8" - requires 3/16" hex key	Stainless Steel	
8	3	Polyethylene Plug 3/8"	Polyethylene Plug 3/8"	LDPE Black	

COPYRIGHT RESERVED THIS PLAN DRAWING AND DESIGN ARE, AND AT ALL TIMES REMAIN, THE EXCLUSIVE PROPERTY OF RELIANCE FOUNDRY CO. LTD.

RELIANCE FOUNDRY
SINCE 1925
Unit 207, 6450 - 148 Street, Surrey, BC V3S 7G7, Canada
1-877-789-3245 info@reliance-foundry.com
www.reliance-foundry.com

TITLE
Bollard R-7591

SIZE		DWG NO	REV
C		R7591	C4

NOT TO SCALE | SHEET 4 OF 12

Bollard R-7591

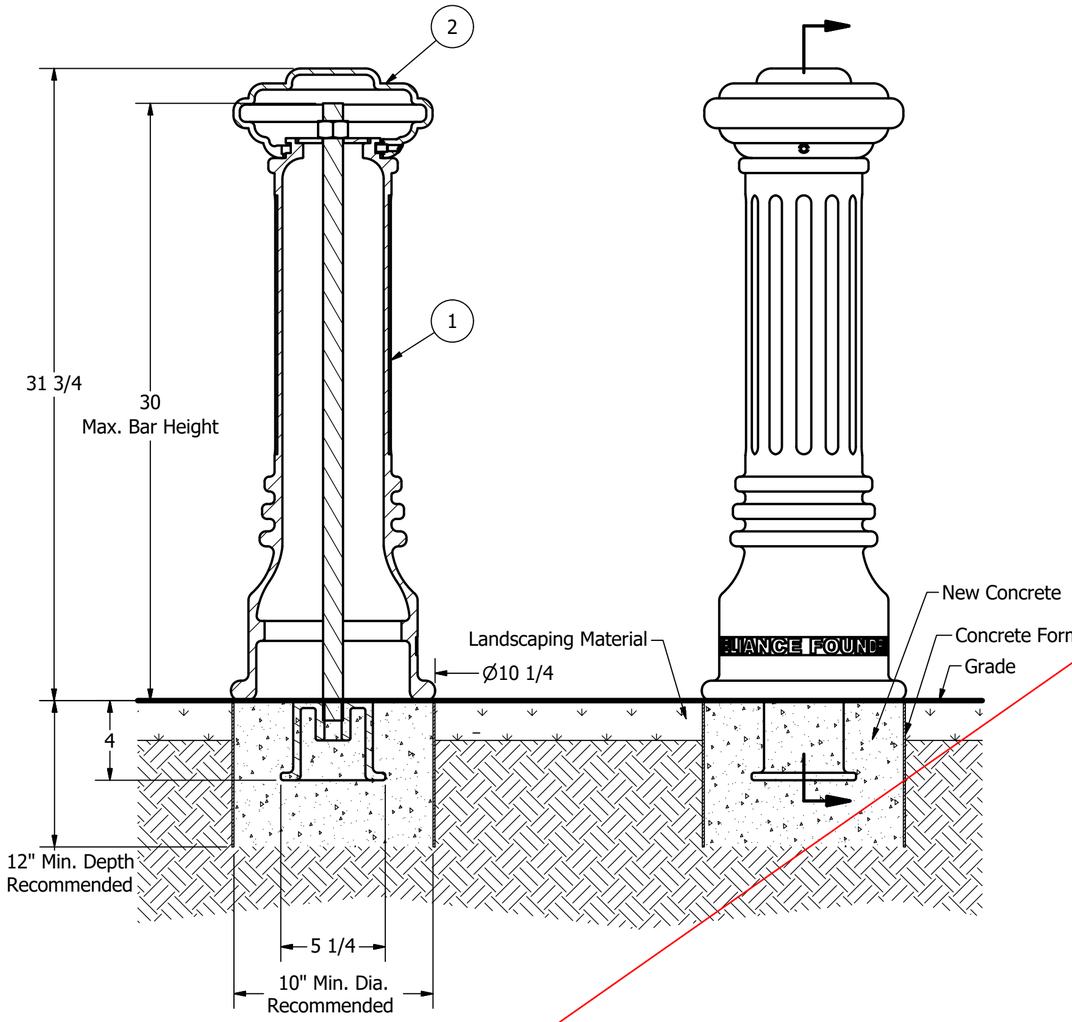

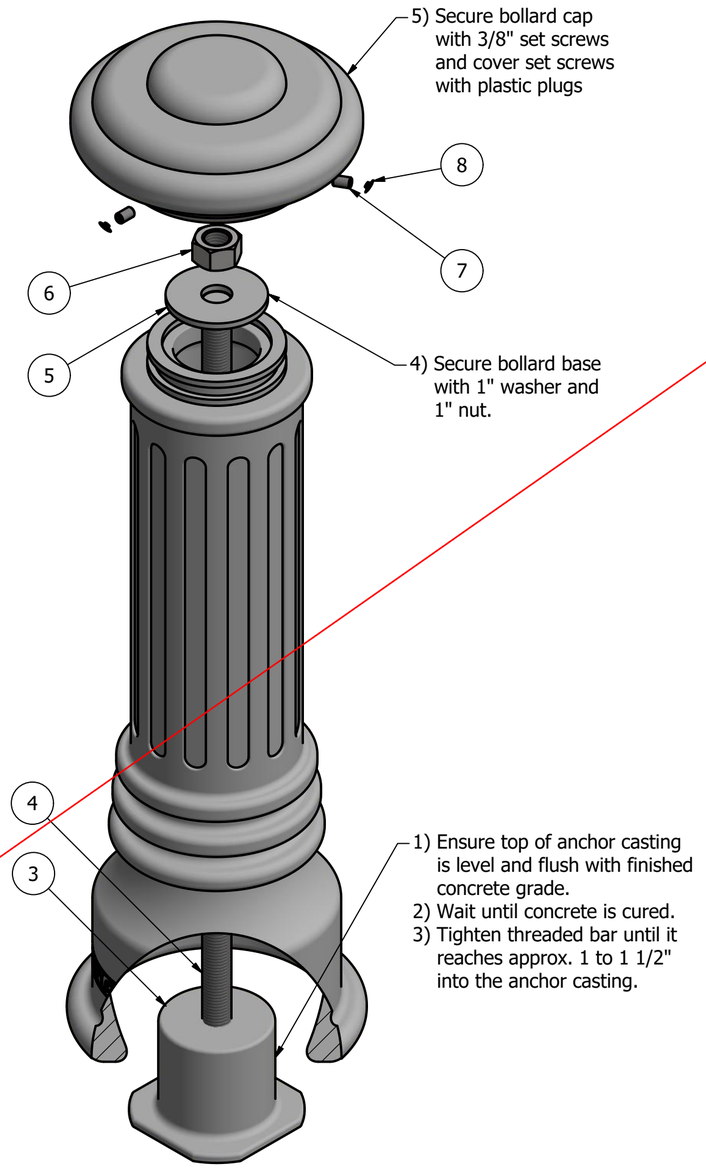

General Description:

The R-7591 Decorative Bollard features a classic design, suitable for traditional and contemporary environments. R-7591 bollards are made from a versatile ductile iron, featuring decorative fluting and corniced top casting for simple but elegant stature. Bollard surfaces are protected by a durable powder coating, available in 6 standard colors, to prevent wear and corrosion. Use as fixed, stand-alone bollards or cover impact-resistant security posts.

Specifications:

Height: 31 3/4"
Base Diameter: 10 1/4"
Weight: 79 lbs (Bollard Only)
Material: Ductile Iron
Max. Interior Security Post Size:
4 1/2" x 25" (Diameter x Height)

Finish Options:

⊙ Polyester Powdercoated

See Reliance Foundry's standard color options at:
www.reliance-foundry.com/bollard/colors-bollards

Installation Options:

○ Fixed - Anchor Casting in New Concrete (see sheet 2 of 12)
○ Fixed - Concrete Insert Anchor in Existing Concrete (see sheet 3 of 12)
○ Fixed - Adhesive Anchor in Existing Concrete (see sheet 4 of 12)
⊙ Fixed - Anchor Casting with Concrete Form (see sheet 5 of 12)
○ Post Cover - New Post in New Concrete (see sheet 6 of 12)
○ Post Cover - New Post in Existing Concrete (see sheet 7 of 12)
○ Post Cover - Existing Post with Adhesive Anchor (see sheet 8 of 12)
○ Post Cover - Existing Post with Concrete Anchor (see sheet 9 of 12)
○ Removable - Anchor Casting in New Concrete (see sheet 10 of 12)
○ Removable - Concrete Insert Anchor in Existing Concrete (see sheet 11 of 12)
○ Removable - Premium Retractable in New Concrete (see sheet 12 of 12)

For more information on bollard post installation, please visit:
www.reliance-foundry.com/bollard/installation-bollards

Care and Maintenance:

Reliance's line of bollards are finished with a long-lasting powder-coating. Proper care and maintenance are required. Regularly-performed inspections and routine cleaning will ensure that a bollard retains its aesthetic appeal and does not become damaged by the elements.

See Reliance Foundry's maintenance guide at:
www.reliance-foundry.com/bollard/maintenance-bollards

Notes:
1) Bollard post is provided as shown. Concrete, foundation and/or installation ordered separately or provided by others.
2) Minimum foundation sizes depend on local soil conditions, weather conditions, and engineering requirements.
3) Dimensions provided herein is for reference only. Please consult Reliance Foundry sales professionals if any dimension is critical to your particular installation.
4) Reliance Foundry reserves the right to amend design and specifications without prior notice for product improvement.

Tools needed:
1) Measuring tape
2) 1 1/2" wrench
3) 3/16" hex key

PARTS LIST

ITEM	QTY	PART NUMBER	DESCRIPTION	MATERIAL	WEIGHT
1	1	R7591B	R7591 Base	Ductile Iron Powder Coated	60 lbs
2	1	R7591C	R7591 Cap	Ductile Iron Powder Coated	19 lbs
3	1	R7500AN 1"	R7500 Anchor Casting 1"	Ductile Iron Hot Dip Galvanized	8 3/8 lbs
4	1	R7500BAR 1"	R7500 Threaded Bar 1" x 31"	Steel Plated	6 3/4 lbs
5	1	Washer 1" OD 3 1/2"	Washer 1" OD 3 1/2" Thick 1/4"	Steel Plated	5/8 lbs
6	1	Hex Nut 1"	Hex Nut 1" - requires 1 1/2" wrench	Steel Plated	1/4 lbs
7	3	Hexagon Socket Set Screw 3/8" x 5/8"	Hexagon Socket Set Screw 3/8" x 5/8" - requires 3/16" hex key	Stainless Steel	
8	3	Polyethylene Plug 3/8"	Polyethylene Plug 3/8"	LDPE Black	

COPYRIGHT RESERVED THIS PLAN DRAWING AND DESIGN ARE, AND AT ALL TIMES REMAIN, THE EXCLUSIVE PROPERTY OF RELIANCE FOUNDRY CO. LTD.

RELIANCE FOUNDRY
SINCE 1925
Unit 207, 6450 - 148 Street, Surrey, BC V3S 7G7, Canada
1-877-789-3245 info@reliance-foundry.com
www.reliance-foundry.com

TITLE
Bollard R-7591

SIZE		DWG NO	REV
C		R7591	C4

NOT TO SCALE | SHEET 5 OF 12

Bollard R-7591

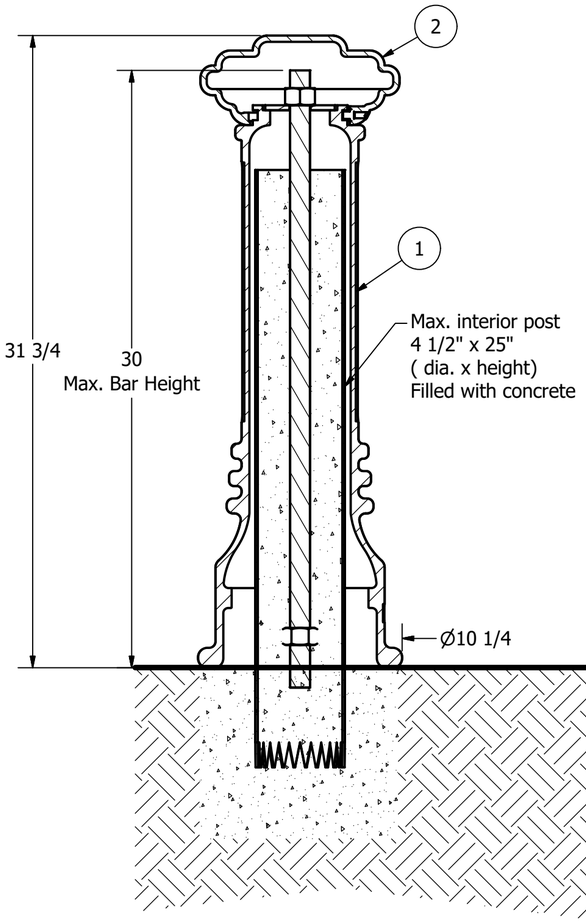

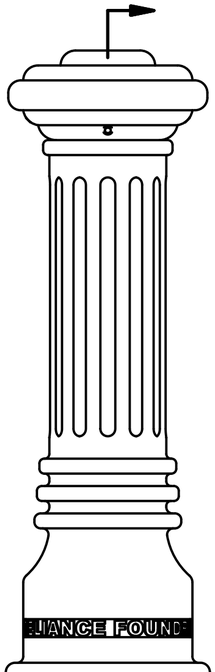

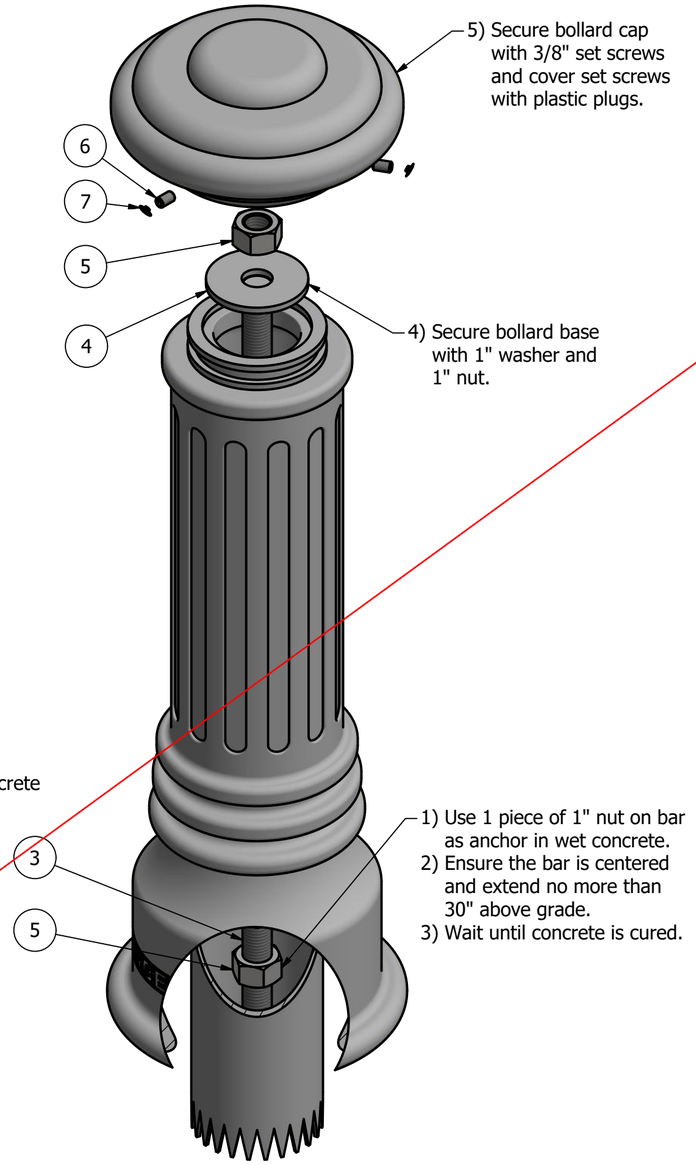

General Description:

The R-7591 Decorative Bollard features a classic design, suitable for traditional and contemporary environments. R-7591 bollards are made from a versatile ductile iron, featuring decorative fluting and corniced top casting for simple but elegant stature. Bollard surfaces are protected by a durable powder coating, available in 6 standard colors, to prevent wear and corrosion. Use as fixed, stand-alone bollards or cover impact-resistant security posts.

Specifications:

Height: 31 3/4"
Base Diameter: 10 1/4"
Weight: 79 lbs (Bollard Only)
Material: Ductile Iron
Max. Interior Security Post Size:
4 1/2" x 25" (Diameter x Height)

Finish Options:

⊙ Polyester Powdercoated

See Reliance Foundry's standard color options at:
www.reliance-foundry.com/bollard/colors-bollards

Installation Options:

- ○ Fixed - Anchor Casting in New Concrete (see sheet 2 of 12)
- ○ Fixed - Concrete Insert Anchor in Existing Concrete (see sheet 3 of 12)
- ○ Fixed - Adhesive Anchor in Existing Concrete (see sheet 4 of 12)
- ○ Fixed - Anchor Casting with Concrete Form (see sheet 5 of 12)
- ⊙ Post Cover - New Post in New Concrete (see sheet 6 of 12)
- ○ Post Cover - New Post in Existing Concrete (see sheet 7 of 12)
- ○ Post Cover - Existing Post with Adhesive Anchor (see sheet 8 of 12)
- ○ Post Cover - Existing Post with Concrete Anchor (see sheet 9 of 12)
- ○ Removable - Anchor Casting in New Concrete (see sheet 10 of 12)
- ○ Removable - Concrete Insert Anchor in Existing Concrete (see sheet 11 of 12)
- ○ Removable - Premium Retractable in New Concrete (see sheet 12 of 12)

For more information on bollard post installation, please visit:
www.reliance-foundry.com/bollard/installation-bollards

Care and Maintenance:

Reliance's line of bollards are finished with a long-lasting powder-coating. Proper care and maintenance are required. Regularly-performed inspections and routine cleaning will ensure that a bollard retains its aesthetic appeal and does not become damaged by the elements.

See Reliance Foundry's maintenance guide at:
www.reliance-foundry.com/bollard/maintenance-bollards

Notes:
1) Bollard post is provided as shown. Concrete, foundation and/or installation ordered separately or provided by others.
2) Minimum foundation sizes depend on local soil conditions, weather conditions, and engineering requirements.
3) Dimensions provided herein is for reference only. Please consult Reliance Foundry sales professionals if any dimension is critical to your particular installation.
4) Reliance Foundry reserves the right to amend design and specifications without prior notice for product improvement.

Tools needed:
1) Measuring tape
2) 1 1/2" wrench
3) 3/16" hex key

PARTS LIST

ITEM	QTY	PART NUMBER	DESCRIPTION	MATERIAL	WEIGHT
1	1	R7591B	R7591 Base	Ductile Iron Powder Coated	60 lbs
2	1	R7591C	R7591 Cap	Ductile Iron Powder Coated	19 lbs
3	1	R7500BAR 1"	R7500 Threaded Bar 1" x 31"	Steel Plated	6 3/4 lbs
4	1	Washer 1" OD 3 1/2"	Washer 1" OD 3 1/2" Thick 1/4"	Steel Plated	5/8 lbs
5	2	Hex Nut 1"	Hex Nut 1" - requires 1 1/2" wrench	Steel Plated	1/4 lbs
6	3	Hexagon Socket Set Screw 3/8" x 5/8"	Hexagon Socket Set Screw 3/8" x 5/8" - requires 3/16" hex key	Stainless Steel	
7	3	Polyethylene Plug 3/8"	Polyethylene Plug 3/8"	LDPE Black	

COPYRIGHT RESERVED THIS PLAN DRAWING AND DESIGN ARE, AND AT ALL TIMES REMAIN, THE EXCLUSIVE PROPERTY OF RELIANCE FOUNDRY CO. LTD.

RELIANCE FOUNDRY
SINCE 1925
Unit 207, 6450 - 148 Street, Surrey, BC V3S 7G7, Canada
1-877-789-3245 info@reliance-foundry.com
www.reliance-foundry.com

TITLE
Bollard R-7591

SIZE		DWG NO	REV
C		R7591	C4

NOT TO SCALE | SHEET 6 OF 12

Bollard R-7591

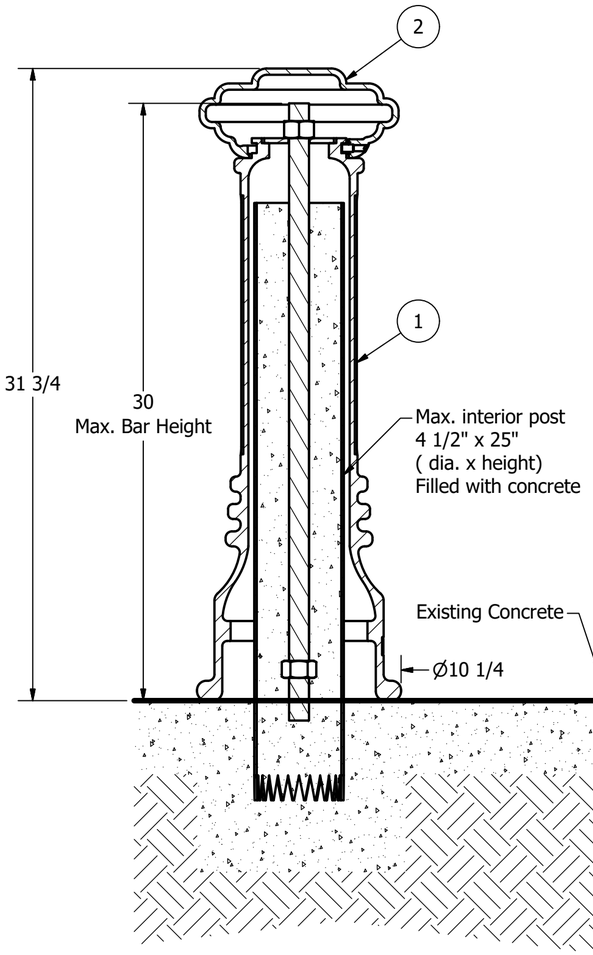

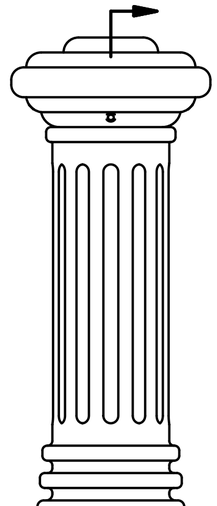

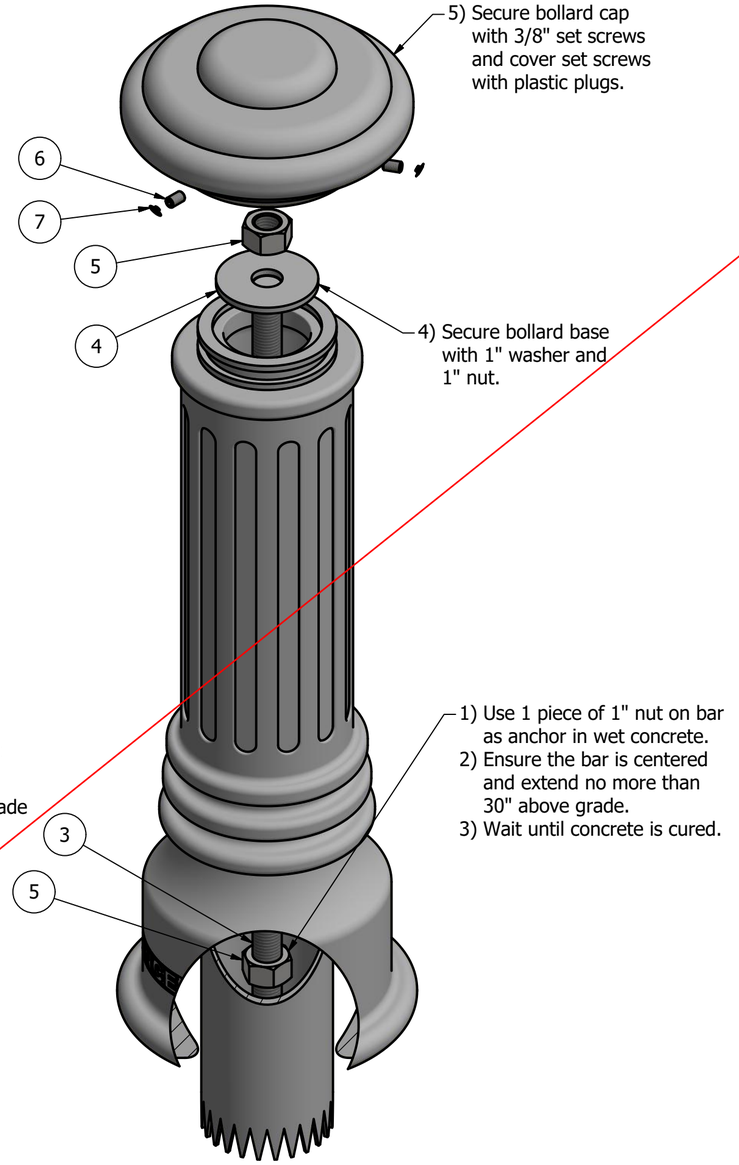

General Description:

The R-7591 Decorative Bollard features a classic design, suitable for traditional and contemporary environments. R-7591 bollards are made from a versatile ductile iron, featuring decorative fluting and corniced top casting for simple but elegant stature. Bollard surfaces are protected by a durable powder coating, available in 6 standard colors, to prevent wear and corrosion. Use as fixed, stand-alone bollards or cover impact-resistant security posts.

Specifications:

Height: 31 3/4"
Base Diameter: 10 1/4"
Weight: 79 lbs (Bollard Only)
Material: Ductile Iron
Max. Interior Security Post Size:
4 1/2" x 25" (Diameter x Height)

Finish Options:

⊙ Polyester Powdercoated

See Reliance Foundry's standard color options at:
www.reliance-foundry.com/bollard/colors-bollards

Installation Options:

- ○ Fixed - Anchor Casting in New Concrete (see sheet 2 of 12)
- ○ Fixed - Concrete Insert Anchor in Existing Concrete (see sheet 3 of 12)
- ○ Fixed - Adhesive Anchor in Existing Concrete (see sheet 4 of 12)
- ○ Fixed - Anchor Casting with Concrete Form (see sheet 5 of 12)
- ○ Post Cover - New Post in New Concrete (see sheet 6 of 12)
- ⊙ Post Cover - New Post in Existing Concrete (see sheet 7 of 12)
- ○ Post Cover - Existing Post with Adhesive Anchor (see sheet 8 of 12)
- ○ Post Cover - Existing Post with Concrete Anchor (see sheet 9 of 12)
- ○ Removable - Anchor Casting in New Concrete (see sheet 10 of 12)
- ○ Removable - Concrete Insert Anchor in Existing Concrete (see sheet 11 of 12)
- ○ Removable - Premium Retractable in New Concrete (see sheet 12 of 12)

For more information on bollard post installation, please visit:
www.reliance-foundry.com/bollard/installation-bollards

Care and Maintenance:

Reliance's line of bollards are finished with a long-lasting powder-coating. Proper care and maintenance are required. Regularly-performed inspections and routine cleaning will ensure that a bollard retains its aesthetic appeal and does not become damaged by the elements.

See Reliance Foundry's maintenance guide at:
www.reliance-foundry.com/bollard/maintenance-bollards

Notes:
1) Bollard post is provided as shown. Concrete, foundation and/or installation ordered separately or provided by others.
2) Minimum foundation sizes depend on local soil conditions, weather conditions, and engineering requirements.
3) Dimensions provided herein is for reference only. Please consult Reliance Foundry sales professionals if any dimension is critical to your particular installation.
4) Reliance Foundry reserves the right to amend design and specifications without prior notice for product improvement.

Tools needed:
1) Measuring tape
2) 1 1/2" wrench
3) 3/16" hex key

PARTS LIST

ITEM	QTY	PART NUMBER	DESCRIPTION	MATERIAL	WEIGHT
1	1	R7591B	R7591 Base	Ductile Iron Powder Coated	60 lbs
2	1	R7591C	R7591 Cap	Ductile Iron Powder Coated	19 lbs
3	1	R7500BAR 1"	R7500 Threaded Bar 1" x 31"	Steel Plated	6 3/4 lbs
4	1	Washer 1" OD 3 1/2"	Washer 1" OD 3 1/2" Thick 1/4"	Steel Plated	5/8 lbs
5	2	Hex Nut 1"	Hex Nut 1" - requires 1 1/2" wrench	Steel Plated	1/4 lbs
6	3	Hexagon Socket Set Screw 3/8" x 5/8"	Hexagon Socket Set Screw 3/8" x 5/8" - requires 3/16" hex key	Stainless Steel	
7	3	Polyethylene Plug 3/8"	Polyethylene Plug 3/8"	LDPE Black	

COPYRIGHT RESERVED THIS PLAN DRAWING AND DESIGN ARE, AND AT ALL TIMES REMAIN, THE EXCLUSIVE PROPERTY OF RELIANCE FOUNDRY CO. LTD.

RELIANCE FOUNDRY
SINCE 1925
Unit 207, 6450 - 148 Street, Surrey, BC V3S 7G7, Canada
1-877-789-3245 info@reliance-foundry.com
www.reliance-foundry.com

TITLE
Bollard R-7591

SIZE		DWG NO	REV
C		R7591	C4

NOT TO SCALE | SHEET 7 OF 12

Bollard R-7591

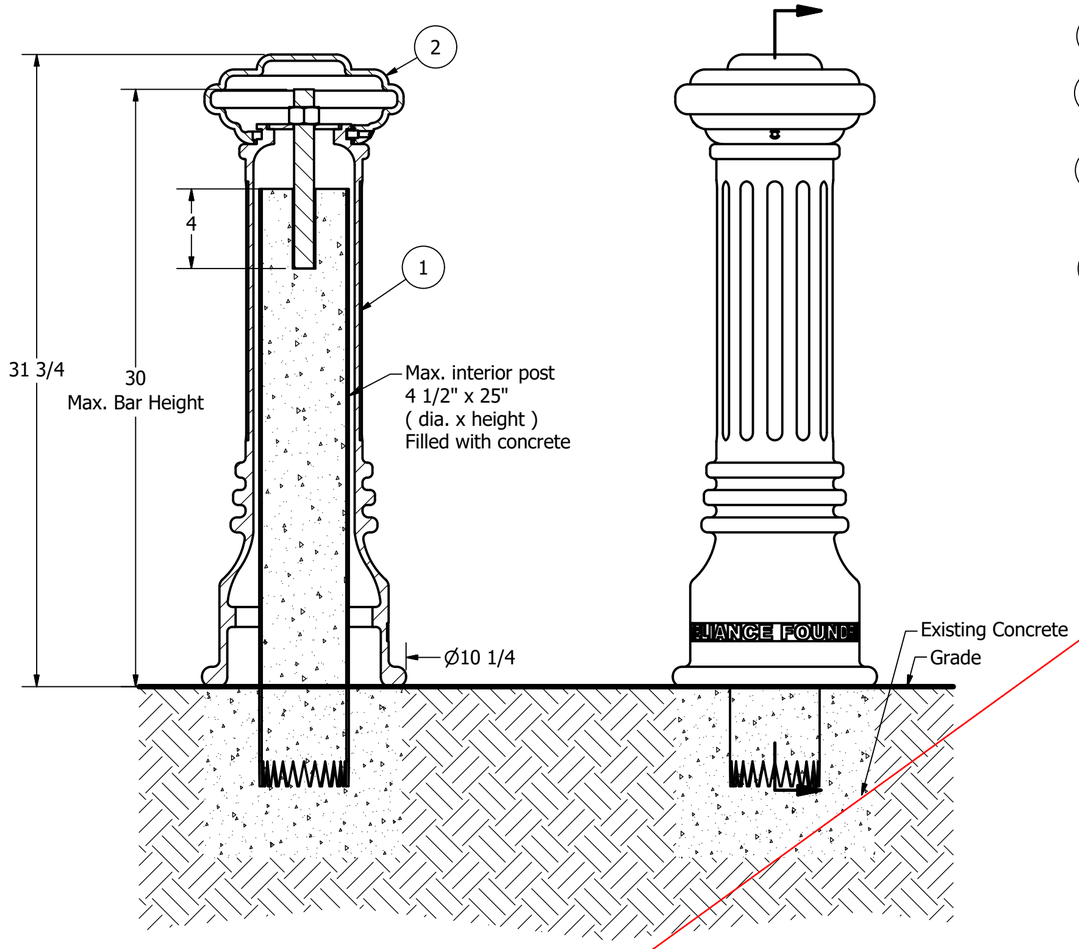

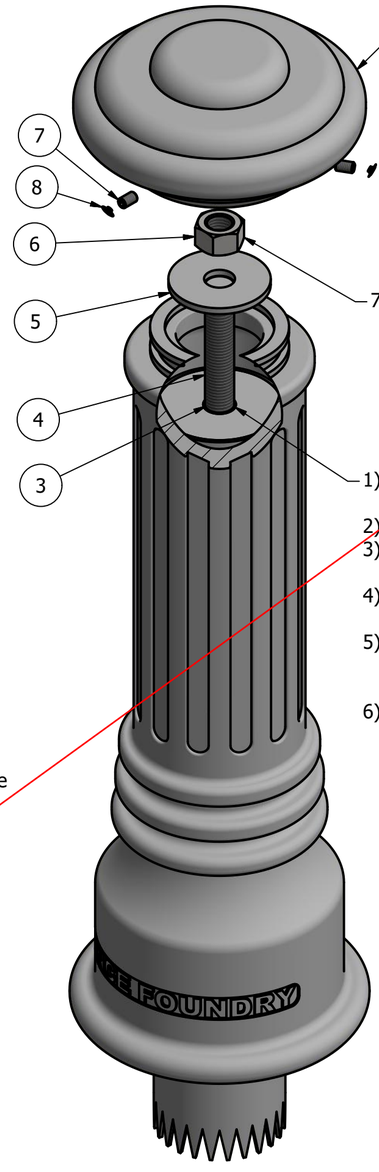

General Description:

The R-7591 Decorative Bollard features a classic design, suitable for traditional and contemporary environments. R-7591 bollards are made from a versatile ductile iron, featuring decorative fluting and corniced top casting for simple but elegant stature. Bollard surfaces are protected by a durable powder coating, available in 6 standard colors, to prevent wear and corrosion. Use as fixed, stand-alone bollards or cover impact-resistant security posts.

Specifications:

Height: 31 3/4"
Base Diameter: 10 1/4"
Weight: 79 lbs (Bollard Only)
Material: Ductile Iron
Max. Interior Security Post Size:
4 1/2" x 25" (Diameter x Height)

Finish Options:

⊙ Polyester Powdercoated

See Reliance Foundry's standard color options at:
www.reliance-foundry.com/bollard/colors-bollards

Installation Options:

- ○ Fixed - Anchor Casting in New Concrete (see sheet 2 of 12)
- ○ Fixed - Concrete Insert Anchor in Existing Concrete (see sheet 3 of 12)
- ○ Fixed - Adhesive Anchor in Existing Concrete (see sheet 4 of 12)
- ○ Fixed - Anchor Casting with Concrete Form (see sheet 5 of 12)
- ○ Post Cover - New Post in New Concrete (see sheet 6 of 12)
- ○ Post Cover - New Post in Existing Concrete (see sheet 7 of 12)
- ⊙ Post Cover - Existing Post with Adhesive Anchor (see sheet 8 of 12)
- ○ Post Cover - Existing Post with Concrete Anchor (see sheet 9 of 12)
- ○ Removable - Anchor Casting in New Concrete (see sheet 10 of 12)
- ○ Removable - Concrete Insert Anchor in Existing Concrete (see sheet 11 of 12)
- ○ Removable - Premium Retractable in New Concrete (see sheet 12 of 12)

For more information on bollard post installation, please visit:
www.reliance-foundry.com/bollard/installation-bollards

Care and Maintenance:

Reliance's line of bollards are finished with a long-lasting powder-coating. Proper care and maintenance are required. Regularly-performed inspections and routine cleaning will ensure that a bollard retains its aesthetic appeal and does not become damaged by the elements.

See Reliance Foundry's maintenance guide at:
www.reliance-foundry.com/bollard/maintenance-bollards

Notes:
1) Bollard post is provided as shown. Concrete, foundation and/or installation ordered separately or provided by others.
2) Minimum foundation sizes depend on local soil conditions, weather conditions, and engineering requirements.
3) Dimensions provided herein is for reference only. Please consult Reliance Foundry sales professionals if any dimension is critical to your particular installation.
4) Reliance Foundry reserves the right to amend design and specifications without prior notice for product improvement.

Tools needed:
1) Measuring tape
2) 1 1/2" wrench
3) 3/16" hex key
4) Hammer drill
5) 1 1/8" Masonry drill bit
6) Caulking gun and utility knife

PARTS LIST

ITEM	QTY	PART NUMBER	DESCRIPTION	MATERIAL	WEIGHT
1	1	R7591B	R7591 Base	Ductile Iron Powder Coated	60 lbs
2	1	R7591C	R7591 Cap	Ductile Iron Powder Coated	19 lbs
3	1	Adhesive Anchor	AC100+ Gold Adhesive Anchoring System	Vinylester Adhesive Mortar	5/8 lbs
4	1	R7500BAR 1"	R7500 Threaded Bar 1" Custom Order Length	Steel Plated	TBD
5	1	Washer 1" OD 3 1/2"	Washer 1" OD 3 1/2" Thick 1/4"	Steel Plated	5/8 lbs
6	1	Hex Nut 1"	Hex Nut 1" - requires 1 1/2" wrench	Steel Plated	1/4 lbs
7	3	Hexagon Socket Set Screw 3/8" x 5/8"	Hexagon Socket Set Screw 3/8" x 5/8" - requires 3/16" hex key	Stainless Steel	
8	3	Polyethylene Plug 3/8"	Polyethylene Plug 3/8"	LDPE Black	

COPYRIGHT RESERVED THIS PLAN DRAWING AND DESIGN ARE, AND AT ALL TIMES REMAIN, THE EXCLUSIVE PROPERTY OF RELIANCE FOUNDRY CO. LTD.

RELIANCE FOUNDRY
SINCE 1925
Unit 207, 6450 - 148 Street, Surrey, BC V3S 7G7, Canada
1-877-789-3245 info@reliance-foundry.com
www.reliance-foundry.com

TITLE
Bollard R-7591

SIZE		DWG NO	REV
C		R7591	C4

NOT TO SCALE | SHEET 8 OF 12

Bollard R-7591

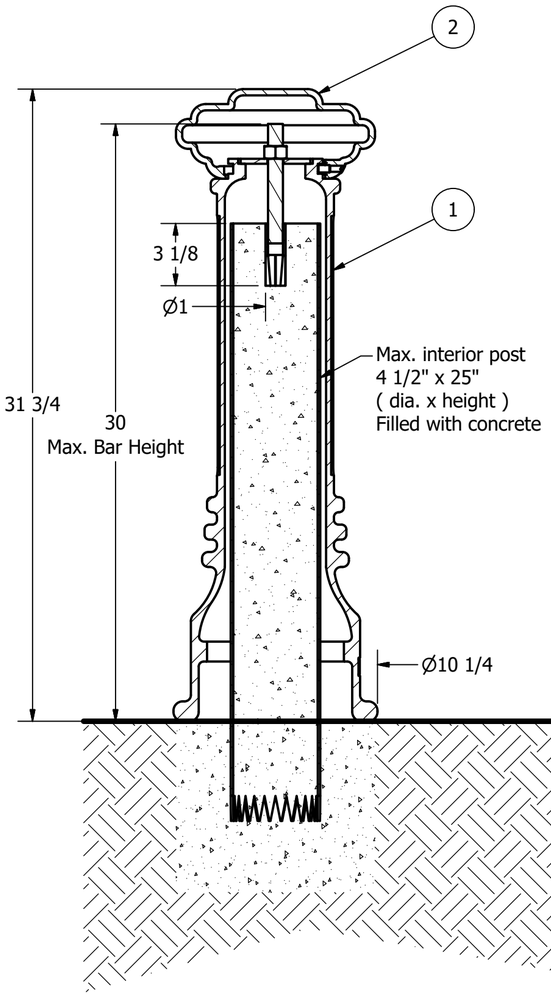

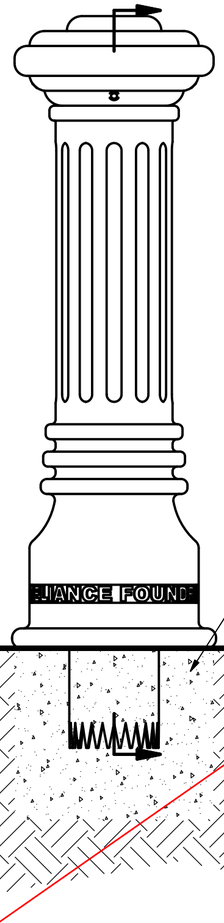

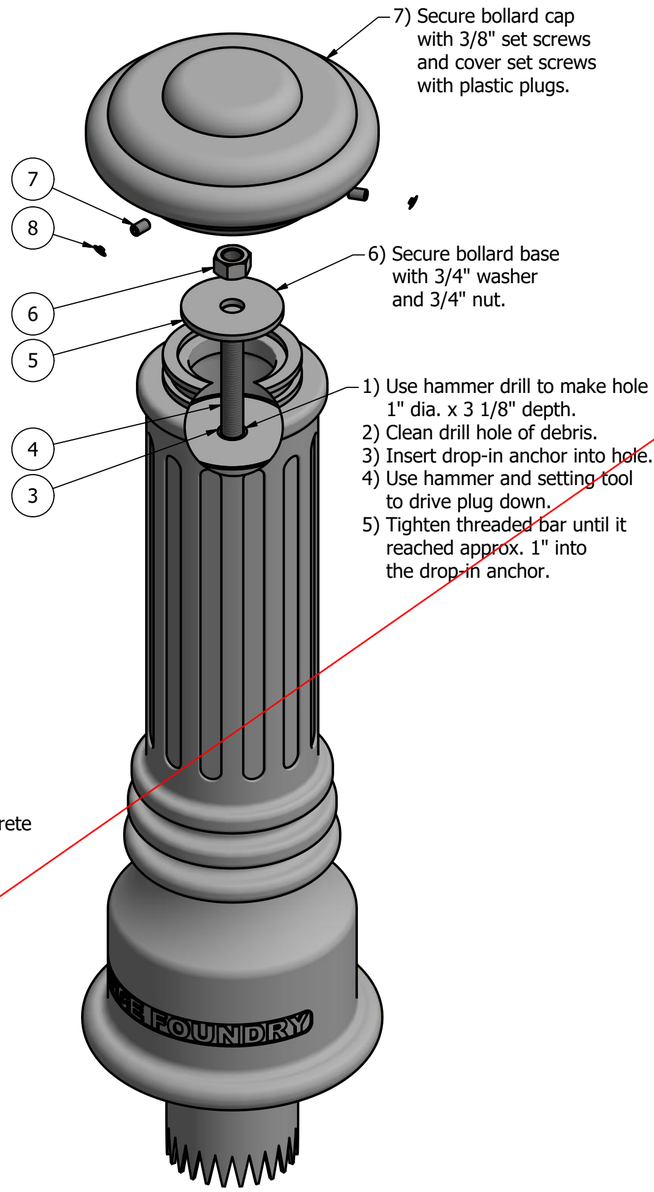

General Description:

The R-7591 Decorative Bollard features a classic design, suitable for traditional and contemporary environments. R-7591 bollards are made from a versatile ductile iron, featuring decorative fluting and corniced top casting for simple but elegant stature. Bollard surfaces are protected by a durable powder coating, available in 6 standard colors, to prevent wear and corrosion. Use as fixed, stand-alone bollards or cover impact-resistant security posts.

Specifications:

Height: 31 3/4"
Base Diameter: 10 1/4"
Weight: 79 lbs (Bollard Only)
Material: Ductile Iron
Max. Interior Security Post Size:
4 1/2" x 25" (Diameter x Height)

Finish Options:

⊙ Polyester Powdercoated

See Reliance Foundry's standard color options at:
www.reliance-foundry.com/bollard/colors-bollards

Installation Options:

- ○ Fixed - Anchor Casting in New Concrete (see sheet 2 of 12)
- ○ Fixed - Concrete Insert Anchor in Existing Concrete (see sheet 3 of 12)
- ○ Fixed - Adhesive Anchor in Existing Concrete (see sheet 4 of 12)
- ○ Fixed - Anchor Casting with Concrete Form (see sheet 5 of 12)
- ○ Post Cover - New Post in New Concrete (see sheet 6 of 12)
- ○ Post Cover - New Post in Existing Concrete (see sheet 7 of 12)
- ○ Post Cover - Existing Post with Adhesive Anchor (see sheet 8 of 12)
- ⊙ Post Cover - Existing Post with Concrete Anchor (see sheet 9 of 12)
- ○ Removable - Anchor Casting in New Concrete (see sheet 10 of 12)
- ○ Removable - Concrete Insert Anchor in Existing Concrete (see sheet 11 of 12)
- ○ Removable - Premium Retractable in New Concrete (see sheet 12 of 12)

For more information on bollard post installation, please visit:
www.reliance-foundry.com/bollard/installation-bollards

Care and Maintenance:

Reliance's line of bollards are finished with a long-lasting powder-coating. Proper care and maintenance are required. Regularly-performed inspections and routine cleaning will ensure that a bollard retains its aesthetic appeal and does not become damaged by the elements.

See Reliance Foundry's maintenance guide at:
www.reliance-foundry.com/bollard/maintenance-bollards

Notes:
1) Bollard post is provided as shown. Concrete, foundation and/or installation ordered separately or provided by others.
2) Minimum foundation sizes depend on local soil conditions, weather conditions, and engineering requirements.
3) Dimensions provided herein is for reference only. Please consult Reliance Foundry sales professionals if any dimension is critical to your particular installation.
4) Reliance Foundry reserves the right to amend design and specifications without prior notice for product improvement.

Tools needed:
1) Measuring tape
2) 1 1/8" wrench
3) 3/16" hex key
4) Hammer drill
5) 1" Masonry drill bit
6) Hammer
7) Drop-in concrete insert setting tool

PARTS LIST

ITEM	QTY	PART NUMBER	DESCRIPTION	MATERIAL	WEIGHT
1	1	R7591B	R7591 Base	Ductile Iron Powder Coated	60 lbs
2	1	R7591C	R7591 Cap	Ductile Iron Powder Coated	19 lbs
3	1	Drop-in Concrete Insert 3/4"	Drop-in Concrete Insert 3/4" - requires 1" x 3 1/8" hole (dia. x depth)	Steel Plated	1/2 lbs
4	1	R7500BAR 3/4"	R7500 Threaded Bar 3/4" Custom Order Length	Steel Plated	TBD
5	1	Washer 3/4" OD 3 1/2"	Washer 3/4" OD 3 1/2" Thick 1/4"	Steel Plated	5/8 lbs
6	1	Hex Nut 3/4"	Hex Nut 3/4" - requires 1 1/8" wrench	Steel Plated	1/8 lbs
7	3	Hexagon Socket Set Screw 3/8" x 5/8"	Hexagon Socket Set Screw 3/8" x 5/8" - requires 3/16" hex key	Stainless Steel	
8	3	Polyethylene Plug 3/8"	Polyethylene Plug 3/8"	LDPE Black	

COPYRIGHT RESERVED THIS PLAN DRAWING AND DESIGN ARE, AND AT ALL TIMES REMAIN, THE EXCLUSIVE PROPERTY OF RELIANCE FOUNDRY CO. LTD.

RELIANCE FOUNDRY
SINCE 1925
Unit 207, 6450 - 148 Street, Surrey, BC V3S 7G7, Canada
1-877-789-3245 info@reliance-foundry.com
www.reliance-foundry.com

TITLE
Bollard R-7591

SIZE		DWG NO	REV
C		R7591	C4

NOT TO SCALE

Bollard R-7591

NEW Concrete Install

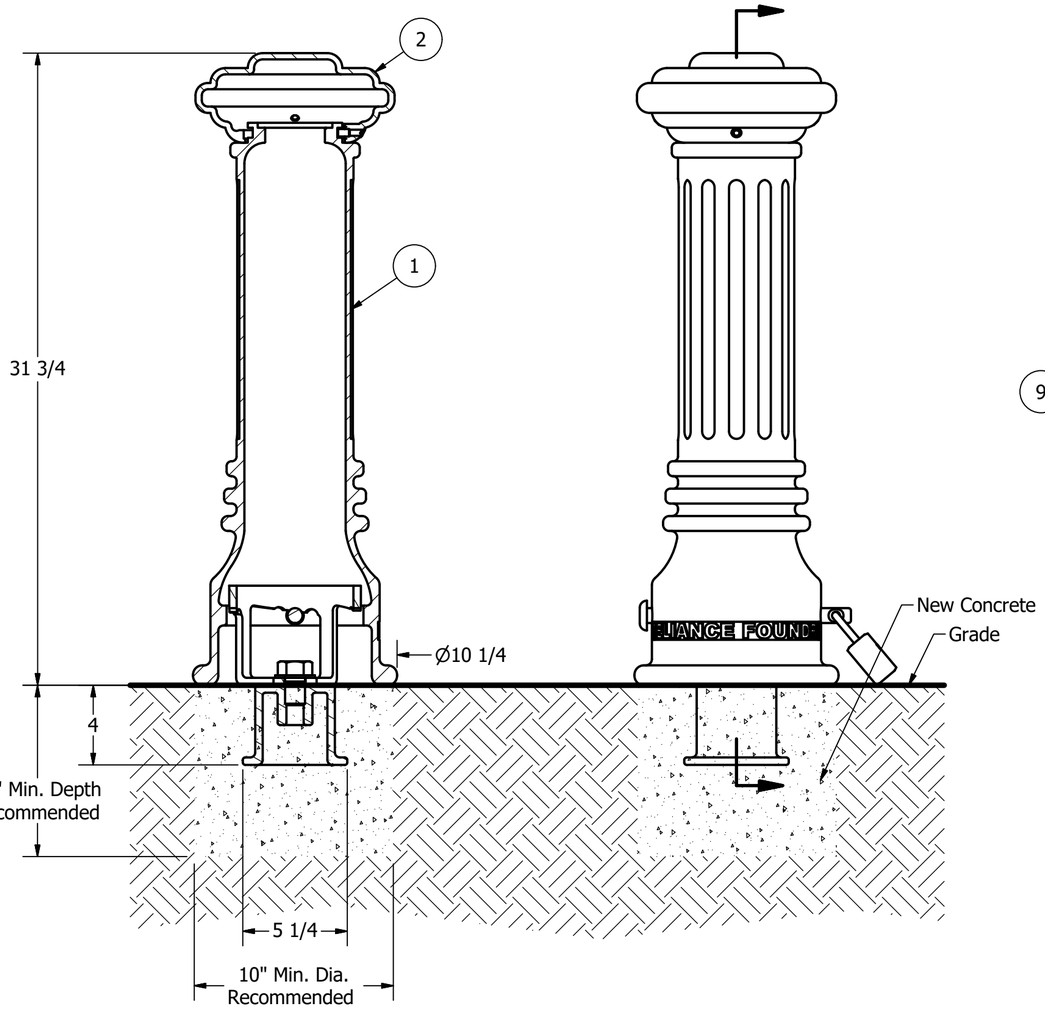

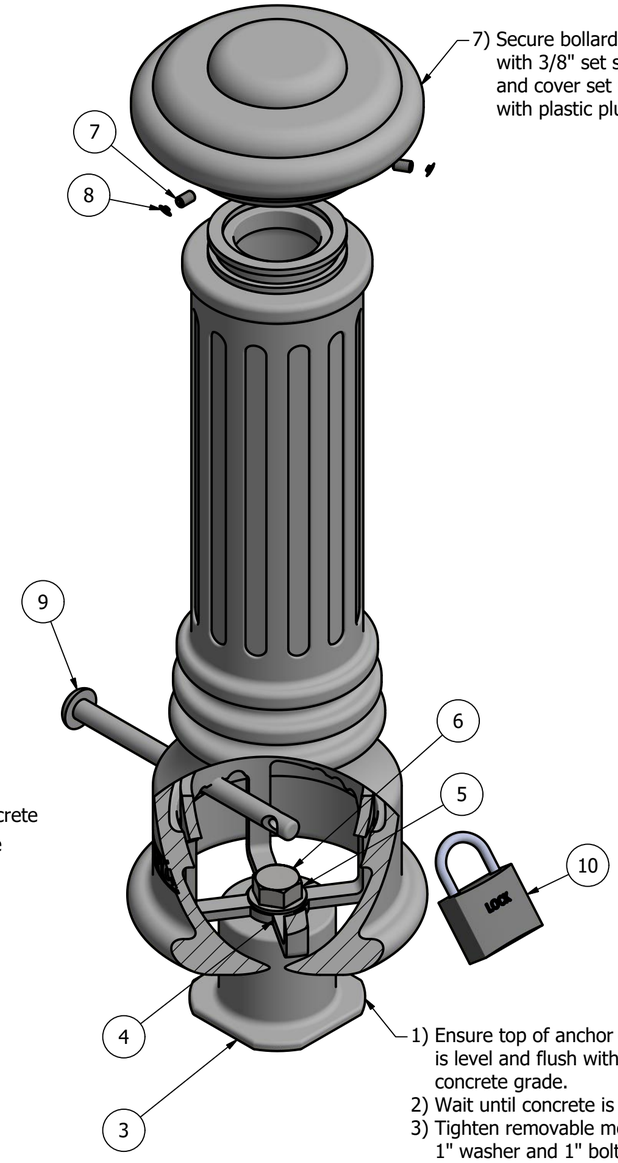

1) Ensure top of anchor casting is level and flush with finished concrete grade.
2) Wait until concrete is cured.
3) Tighten removable mount with 1" washer and 1" bolt.
4) Align and insert lock pin through bollard base.
5) Turn bollard base clockwise to tighten it into position.
6) Fasten the padlock.

Notes:
1) Bollard post is provided as shown. Concrete, foundation and/or installation ordered separately or provided by others.
2) Minimum foundation sizes depend on local soil conditions, weather conditions, and engineering requirements.
3) Dimensions provided herein is for reference only. Please consult Reliance Foundry sales professionals if any dimension is critical to your particular installation.
4) Reliance Foundry reserves the right to amend design and specifications without prior notice for product improvement.

Tools needed:
1) Measuring tape
2) 1 1/2" wrench
3) 3/16" hex key

General Description:

The R-7591 Decorative Bollard features a classic design, suitable for traditional and contemporary environments. R-7591 bollards are made from a versatile ductile iron, featuring decorative fluting and corniced top casting for simple but elegant stature. Bollard surfaces are protected by a durable powder coating, available in 6 standard colors, to prevent wear and corrosion. Use as fixed, stand-alone bollards or cover impact-resistant security posts.

Specifications:

Height: 31 3/4"
Base Diameter: 10 1/4"
Weight: 79 lbs (Bollard Only)
Material: Ductile Iron
Max. Interior Security Post Size:
4 1/2" x 25" (Diameter x Height)

Finish Options:

⊙ Polyester Powdercoated

See Reliance Foundry's standard color options at:
www.reliance-foundry.com/bollard/colors-bollards

Installation Options:

- ○ Fixed - Anchor Casting in New Concrete (see sheet 2 of 12)
- ○ Fixed - Concrete Insert Anchor in Existing Concrete (see sheet 3 of 12)
- ○ Fixed - Adhesive Anchor in Existing Concrete (see sheet 4 of 12)
- ○ Fixed - Anchor Casting with Concrete Form (see sheet 5 of 12)
- ○ Post Cover - New Post in New Concrete (see sheet 6 of 12)
- ○ Post Cover - New Post in Existing Concrete (see sheet 7 of 12)
- ○ Post Cover - Existing Post with Adhesive Anchor (see sheet 8 of 12)
- ○ Post Cover - Existing Post with Concrete Anchor (see sheet 9 of 12)
- ⊙ Removable - Anchor Casting in New Concrete (see sheet 10 of 12)
- ○ Removable - Concrete Insert Anchor in Existing Concrete (see sheet 11 of 12)
- ○ Removable - Premium Retractable in New Concrete (see sheet 12 of 12)

For more information on bollard post installation, please visit:
www.reliance-foundry.com/bollard/installation-bollards

Care and Maintenance:

Reliance's line of bollards are finished with a long-lasting powder-coating. Proper care and maintenance are required. Regularly-performed inspections and routine cleaning will ensure that a bollard retains its aesthetic appeal and does not become damaged by the elements.

See Reliance Foundry's maintenance guide at:
www.reliance-foundry.com/bollard/maintenance-bollards

PARTS LIST

ITEM	QTY	PART NUMBER	DESCRIPTION	MATERIAL	WEIGHT
1	1	R7591B	R7591 Base	Ductile Iron Powder Coated	60 lbs
2	1	R7591C	R7591 Cap	Ductile Iron Powder Coated	19 lbs
3	1	R7500AN 1"	R7500 Anchor Casting 1"	Ductile Iron Hot Dip Galvanized	8 3/8 lbs
4	1	R7500RM 1"	R7500 Removable Mount 1"	Steel Hot Dip Galvanized	4 5/8 lbs
5	1	Washer 1" OD 2"	Washer 1" OD 2" Thick 1/8"	Steel Plated	1/8 lbs
6	1	Hex Bolt 1" x 1 1/2"	Hex Bolt 1" x 1 1/2" - requires 1 1/2" wrench	Steel Plated	5/8 lbs
7	3	Hexagon Socket Set Screw 3/8" x 5/8"	Hexagon Socket Set Screw 3/8" x 5/8" - requires 3/16" hex key	Stainless Steel	
8	3	Polyethylene Plug 3/8"	Polyethylene Plug 3/8"	LDPE Black	
9	1	R7500 Lock Pin 3/4" x 10"	R7500 Lock Pin 3/4" x 10"	Steel Powder Coated	1 1/2 lbs
10	1	Padlock (Optional)	Optional Padlock (Brass or Stainless Steel)	Choice of Brass or Stainless Steel	5/8 lbs

COPYRIGHT RESERVED THIS PLAN DRAWING AND DESIGN ARE, AND AT ALL TIMES REMAIN, THE EXCLUSIVE PROPERTY OF RELIANCE FOUNDRY CO. LTD.

RELIANCE FOUNDRY
SINCE 1925
Unit 207, 6450 - 148 Street, Surrey, BC V3S 7G7, Canada
1-877-789-3245 info@reliance-foundry.com
www.reliance-foundry.com

TITLE: Bollard R-7591
SIZE: C
DWG NO: R7591
REV: C4
NOT TO SCALE
SHEET 10 OF 12

Bollard R-7591

Existing Concrete Install

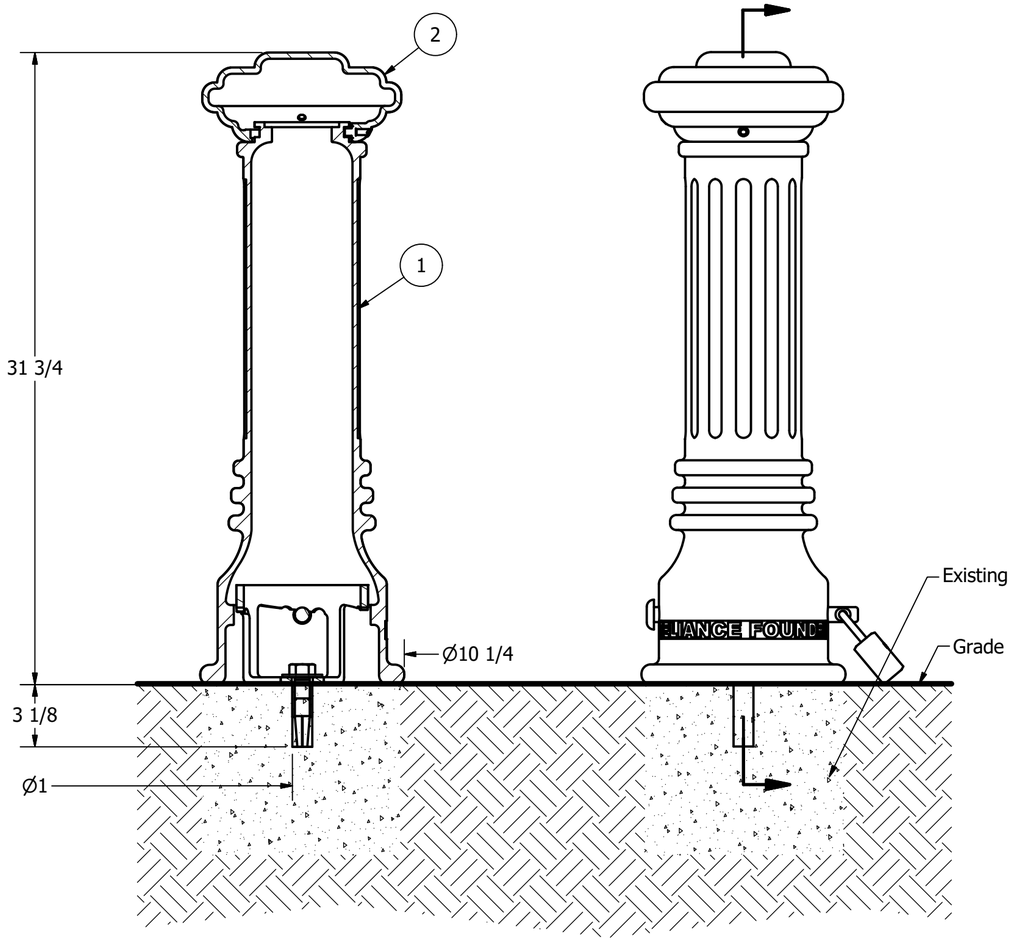

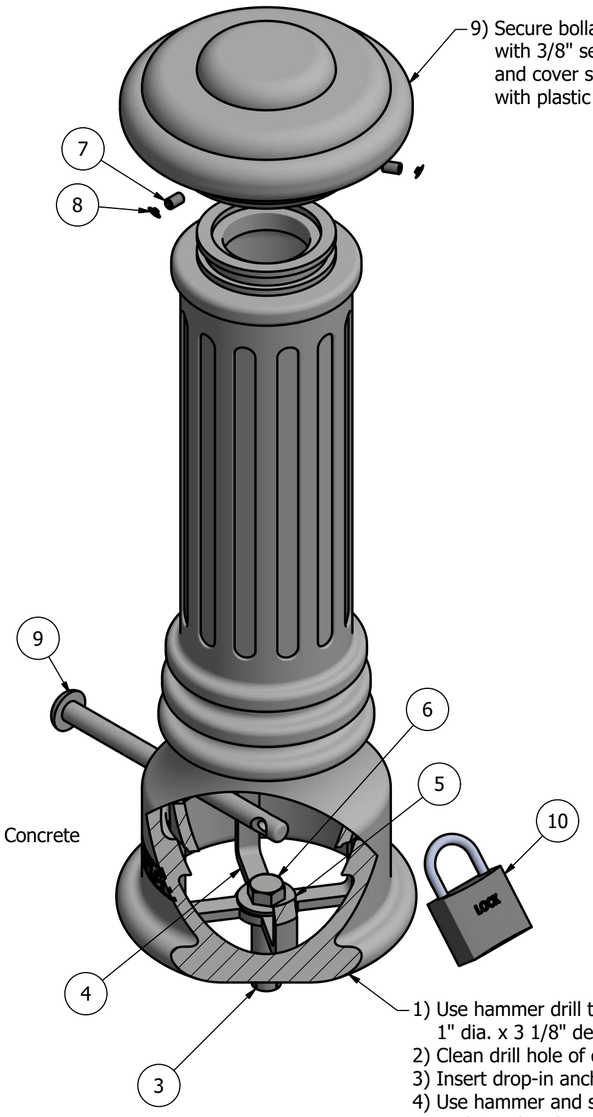

Notes:
1) Bollard post is provided as shown. Concrete, foundation and/or installation ordered separately or provided by others.
2) Minimum foundation sizes depend on local soil conditions, weather conditions, and engineering requirements.
3) Dimensions provided herein is for reference only. Please consult Reliance Foundry sales professionals if any dimension is critical to your particular installation.
4) Reliance Foundry reserves the right to amend design and specifications without prior notice for product improvement.

Tools needed:
1) Measuring tape
2) 1 1/8" wrench
3) 3/16" hex key
4) Hammer drill
5) 1" Masonry drill bit
6) Hammer
7) Drop-in concrete insert setting tool

PARTS LIST

ITEM	QTY	PART NUMBER	DESCRIPTION	MATERIAL	WEIGHT
1	1	R7591B	R7591 Base	Ductile Iron Powder Coated	60 lbs
2	1	R7591C	R7591 Cap	Ductile Iron Powder Coated	19 lbs
3	1	Drop-in Concrete Insert 3/4"	Drop-in Concrete Insert 3/4" - requires 1" x 3 1/8" hole (dia. x depth)	Steel Plated	1/2 lbs
4	1	R7500RM 1"	R7500 Removable Mount 1"	Steel Hot Dip Galvanized	4 5/8 lbs
5	1	Washer 3/4" OD 2"	Washer 3/4" OD 2" Thick 1/8"	Steel Plated	1/8 lbs
6	1	Hex Bolt 3/4" x 1 1/4"	Hex Bolt 3/4" x 1 1/4" - requires 1 1/8" wrench	Steel Plated	1/4 lbs
7	3	Hexagon Socket Set Screw 3/8" x 5/8"	Hexagon Socket Set Screw 3/8" x 5/8" - requires 3/16" hex key	Stainless Steel	
8	3	Polyethylene Plug 3/8"	Polyethylene Plug 3/8"	LDPE Black	
9	1	R7500 Lock Pin 3/4" x 10"	R7500 Lock Pin 3/4" x 10"	Steel Powder Coated	1 1/2 lbs
10	1	Padlock (Optional)	Optional Padlock (Brass or Stainless Steel)	Choice of Brass or Stainless Steel	5/8 lbs

General Description:

The R-7591 Decorative Bollard features a classic design, suitable for traditional and contemporary environments. R-7591 bollards are made from a versatile ductile iron, featuring decorative fluting and corniced top casting for simple but elegant stature. Bollard surfaces are protected by a durable powder coating, available in 6 standard colors, to prevent wear and corrosion. Use as fixed, stand-alone bollards or cover impact-resistant security posts.

Specifications:

Height: 31 3/4"
Base Diameter: 10 1/4"
Weight: 79 lbs (Bollard Only)
Material: Ductile Iron
Max. Interior Security Post Size:
4 1/2" x 25" (Diameter x Height)

Finish Options:

⊙ Polyester Powdercoated

See Reliance Foundry's standard color options at:
www.reliance-foundry.com/bollard/colors-bollards

Installation Options:

○ Fixed - Anchor Casting in New Concrete (see sheet 2 of 12)
○ Fixed - Concrete Insert Anchor in Existing Concrete (see sheet 3 of 12)
○ Fixed - Adhesive Anchor in Existing Concrete (see sheet 4 of 12)
○ Fixed - Anchor Casting with Concrete Form (see sheet 5 of 12)
○ Post Cover - New Post in New Concrete (see sheet 6 of 12)
○ Post Cover - New Post in Existing Concrete (see sheet 7 of 12)
○ Post Cover - Existing Post with Adhesive Anchor (see sheet 8 of 12)
○ Post Cover - Existing Post with Concrete Anchor (see sheet 9 of 12)
○ Removable - Anchor Casting in New Concrete (see sheet 10 of 12)
⊙ Removable - Concrete Insert Anchor in Existing Concrete (see sheet 11 of 12)
○ Removable - Premium Retractable in New Concrete (see sheet 12 of 12)

For more information on bollard post installation, please visit:
www.reliance-foundry.com/bollard/installation-bollards

Care and Maintenance:

Reliance's line of bollards are finished with a long-lasting powder-coating. Proper care and maintenance are required. Regularly-performed inspections and routine cleaning will ensure that a bollard retains its aesthetic appeal and does not become damaged by the elements.

See Reliance Foundry's maintenance guide at:
www.reliance-foundry.com/bollard/maintenance-bollards

RELIANCE FOUNDRY
SINCE 1925
Unit 207, 6450 - 148 Street, Surrey, BC V3S 7G7, Canada
1-877-789-3245 info@reliance-foundry.com
www.reliance-foundry.com

TITLE: Bollard R-7591
SIZE: C | DWG NO: R7591 | REV: C4
NOT TO SCALE | SHEET 11 OF 12

COPYRIGHT RESERVED THIS PLAN DRAWING AND DESIGN ARE, AND AT ALL TIMES REMAIN, THE EXCLUSIVE PROPERTY OF RELIANCE FOUNDRY CO. LTD.

Bollard R-7591

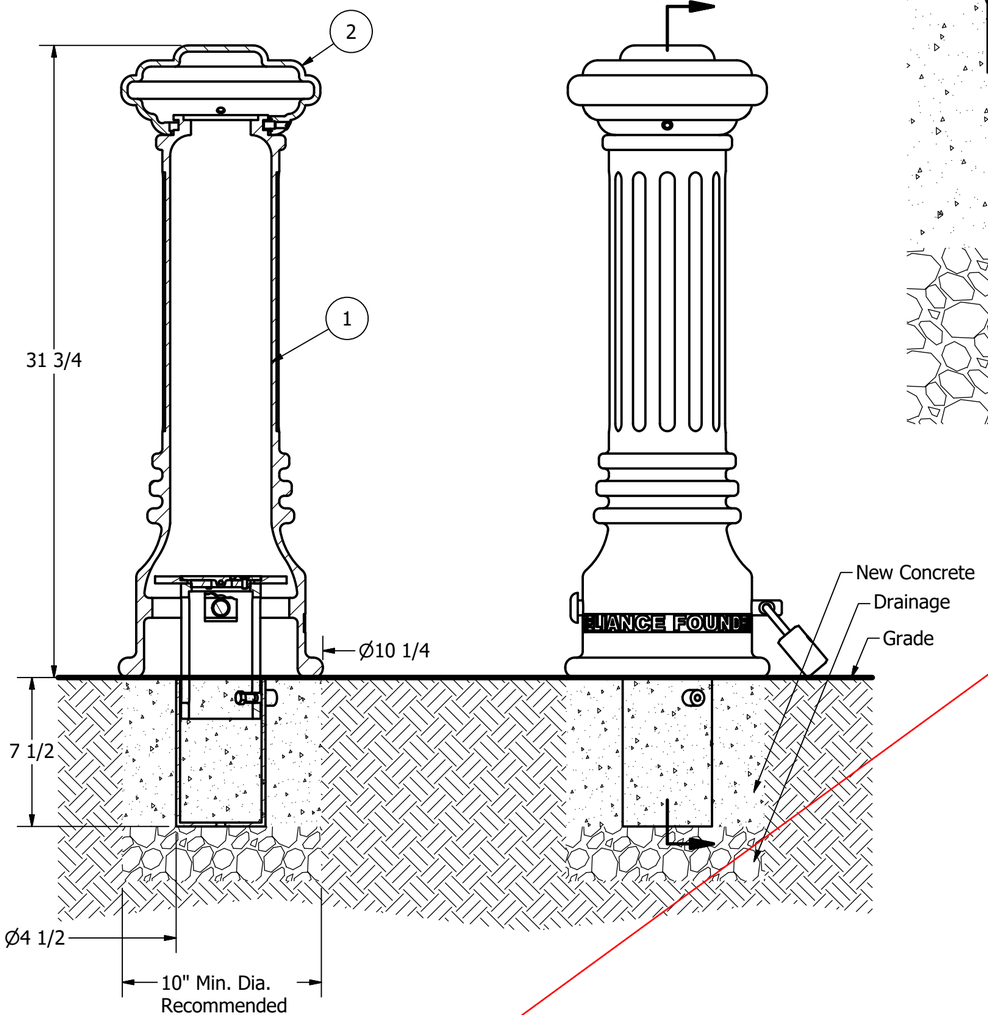

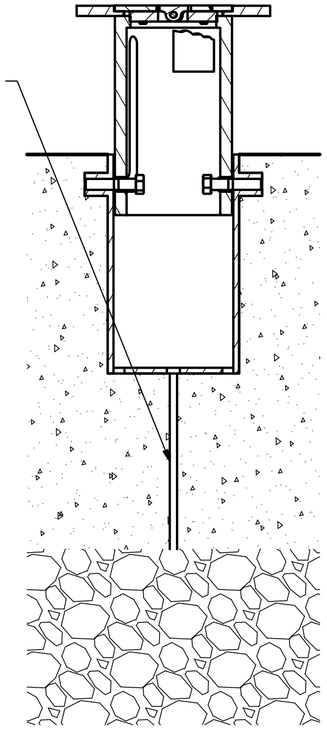

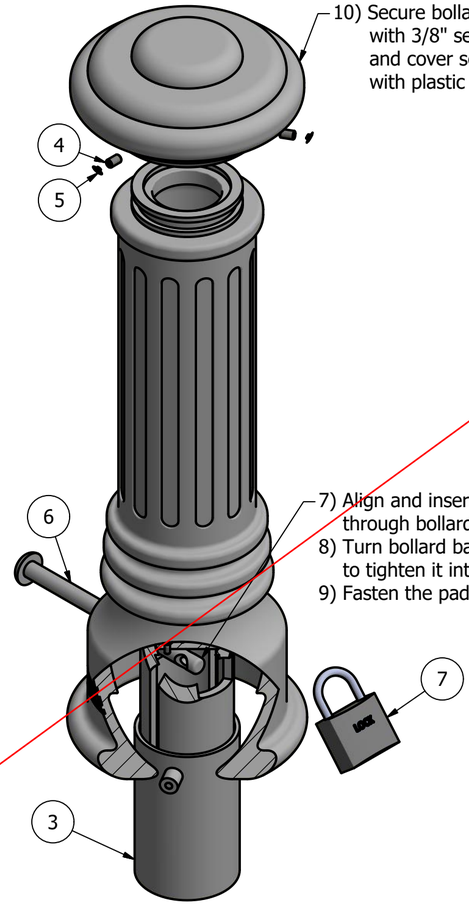

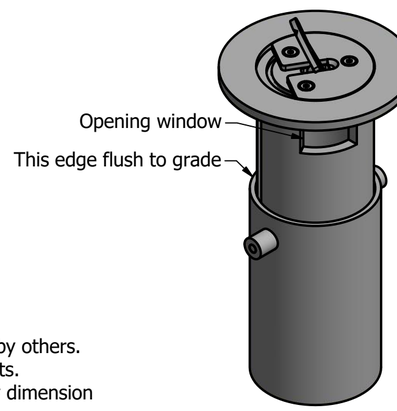

Tools needed:
1) Measuring tape
2) 3/16" allen key

Notes:
1) Bollard post is provided as shown. Concrete, foundation and/or installation ordered separately or provided by others.
2) Minimum foundation sizes depend on local soil conditions, weather conditions, and engineering requirements.
3) Dimensions provided herein is for reference only. Please consult Reliance Foundry sales professionals if any dimension is critical to your particular installation.
4) Reliance Foundry reserves the right to amend design and specifications without prior notice for product improvement.

General Description:

The R-7591 Decorative Bollard features a classic design, suitable for traditional and contemporary environments. R-7591 bollards are made from a versatile ductile iron, featuring decorative fluting and corniced top casting for simple but elegant stature. Bollard surfaces are protected by a durable powder coating, available in 6 standard colors, to prevent wear and corrosion. Use as fixed, stand-alone bollards or cover impact-resistant security posts.

Specifications:

Height: 31 3/4"
Base Diameter: 10 1/4"
Weight: 79 lbs (Bollard Only)
Material: Ductile Iron
Max. Interior Security Post Size:
4 1/2" x 25" (Diameter x Height)

Finish Options:

⊙ Polyester Powdercoated

See Reliance Foundry's standard color options at:
www.reliance-foundry.com/bollard/colors-bollards

Installation Options:

- ○ Fixed - Anchor Casting in New Concrete (see sheet 2 of 12)
- ○ Fixed - Concrete Insert Anchor in Existing Concrete (see sheet 3 of 12)
- ○ Fixed - Adhesive Anchor in Existing Concrete (see sheet 4 of 12)
- ○ Fixed - Anchor Casting with Concrete Form (see sheet 5 of 12)
- ○ Post Cover - New Post in New Concrete (see sheet 6 of 12)
- ○ Post Cover - New Post in Existing Concrete (see sheet 7 of 12)
- ○ Post Cover - Existing Post with Adhesive Anchor (see sheet 8 of 12)
- ○ Post Cover - Existing Post with Concrete Anchor (see sheet 9 of 12)
- ○ Removable - Anchor Casting in New Concrete (see sheet 10 of 12)
- ○ Removable - Concrete Insert Anchor in Existing Concrete (see sheet 11 of 12)
- ⊙ Removable - Premium Retractable in New Concrete (see sheet 12 of 12)

For more information on bollard post installation, please visit:
www.reliance-foundry.com/bollard/installation-bollards

Care and Maintenance:

Reliance's line of bollards are finished with a long-lasting powder-coating. Proper care and maintenance are required. Regularly-performed inspections and routine cleaning will ensure that a bollard retains its aesthetic appeal and does not become damaged by the elements.

See Reliance Foundry's maintenance guide at:
www.reliance-foundry.com/bollard/maintenance-bollards

PARTS LIST

ITEM	QTY	PART NUMBER	DESCRIPTION	MATERIAL	WEIGHT
1	1	R7591B	R7591 Base	Ductile Iron Powder Coated	60 lbs
2	1	R7591C	R7591 Cap	Ductile Iron Powder Coated	19 lbs
3	1	R7000	R7000 Retractable Removable Mount w/ Spacer L	Steel Hot Dip Galvanized	17 1/2 lbs
4	3	Hexagon Socket Set Screw 3/8" x 5/8"	Hexagon Socket Set Screw 3/8" x 5/8" - requires 3/16" hex key	Stainless Steel	
5	3	Polyethylene Plug 3/8"	Polyethylene Plug 3/8"	LDPE Black	
6	1	R7500 Lock Pin 3/4" x 10"	R7500 Lock Pin 3/4" x 10"	Steel Powder Coated	1 1/2 lbs
7	1	Padlock (Optional)	Optional Padlock (Brass or Stainless Steel)	Choice of Brass or Stainless Steel	5/8 lbs

COPYRIGHT RESERVED THIS PLAN DRAWING AND DESIGN ARE, AND AT ALL TIMES REMAIN, THE EXCLUSIVE PROPERTY OF RELIANCE FOUNDRY CO. LTD.

RELIANCE FOUNDRY
SINCE 1925
Unit 207, 6450 - 148 Street, Surrey, BC V3S 7G7, Canada
1-877-789-3245 info@reliance-foundry.com
www.reliance-foundry.com

TITLE
Bollard R-7591

SIZE		DWG NO	REV
C		R7591	C4

NOT TO SCALE | SHEET 12 OF 12

STEPHEN F. AUSTIN STATE UNIVERSITY

NACOGDOCHES, TEXAS

INVITATION TO BID

FAILURE TO SIGN WILL DISQUALIFY BID

Bid No.: PLAZA RENOVATION-2019
ADDENDUM NO. 1

Due Date: 12/04/19 at 3:00 P.M.

Signature City Zip

Printed Name

VENDOR NAME AND ADDRESS

Name of Firm

Mailing Address

City State Zip

PHONE/FAX

Phone

FAX

EMAIL

Show bid opening and bid invitation number in lower left hand corner of sealed bid envelope and return sealed bids to:

Stephen F. Austin State University
P. O. Box 13030, SFA Station
2124 Wilson Drive
Nacogdoches, Texas 75962-3030
Phone (936) 468-2206
FAX (936) 468-4282 (See 2.3 reverse side)

See Instruction 2.10 on Back for Vendor ID Number
Is Vendor a State of Texas certified HUB? ☐ Yes

Delivery in _____ Days Cash Disc._____ % _____Days

Check all that apply if Preference Claimed under Rule 34 TAC 20.38

__ Supplies, materials or equipment: produced in TX/offered by TX bidders*
__ Agricultural products grown in TX
__ Agricultural products offered by TX bidders*
__ USA produced supplies, materials or equipment
__ Products produced at facilities located on formerly contaminated property
__ Products of persons with mental or physical disabilities
__ Products made of recycled, remanufactured, or environmentally sensitive materials
__ Energy efficient products
__ Rubberized asphalt paving material
__ Recycled motor oil and lubricants
__ Products and services from economically depressed or blighted areas

*By signing this bid, bidder certifies that if a Texas address is shown as the address of the bidder, bidder qualifies as a Texas resident Bidder as defined in Rule 34 TAC 20.38.

IF QUOTING OTHER THAN THE REFERENCED ITEM(S) BELOW, BROCHURE AND/OR SPECIFICATIONS SHOULD BE ENCLOSED.
ALL BIDS WILL BE CONSIDERED F.O.B. DESTINATION UNLESS OTHERWISE NOTED.

AWARD NOTICE: Stephen F. Austin State University (SFASU) reserves the right to make an award on the basis of low line item bid, low total of line items, or in any other combination that will serve the best interest of SFASU and to reject any and all bid items in the sole discretion of SFASU.

Item No.	Description	Qty. & Unit	Unit Price	Extension
	Quote price on quantity and unit of measure, extend and show total. If error in extension, unit price shall govern. Items for state use are exempt from state sales and federal excise tax. Do not include tax in your bid.			
	ADDENDUM NO. 1 **THIS ADDENDUM MUST BE ACKNOWLEDGED IN ORDER FOR THE RESPONSE TO RECEIVE CONSIDERATION. FAILURE TO ACKNOWLEDGE THE ADDENDUM WILL RESULT IN DISQUALIFICATION OF THE RESPONSE.** **PRE-BID MEETING/SITE VISIT SIGN-IN SHEETS** The sign-in sheets from the mandatory pre-bid meeting/site visit held 11/19/19 are attached.			

STEPHEN F. AUSTIN STATE UNIVERSITY
Invitation To Bid #PLAZA RENOVATION-2019
Addendum No. 1
CONTINUATION PAGE

QUESTIONS

Q: When contractor completes sections of the plaza, who is responsible for redirecting the traffic?
A: SFA will put up signage to re-direct traffic flow.

Q: Will contractor be able to start work while students are still on break? If so, can the water line work be coordinated with SFA staff during the break?
A. SFA staff will return to work on January 2, 2020 and can work with contractor on coordinating the water line work.

Q: Is contractor responsible for providing benches and charging posts?
A. No.

Q.Is the adjustment in C200 of the plans to be performed by the contractor?
A. Yes.

Q. Are new contract grades the same as existing?
A. They are very close. There are minor adjustments related to ADA.

Q. Is the concrete sidewalk required to have waterproofing per C900 in the plans?
A. All sidewalk is to have pedestrian paving.

Q.Are there different depths in the existing concrete?
A. Yes, the existing plaza consists of approximately 4 inch thick sidewalk pavement and the existing street section consists of approximately 6 inch thick concrete.

Q. Is temporary perimeter construction fencing needed at site?
A. Yes. Orange fencing is acceptable.

Q.Will any electrical rework be needed?
A. No. The depth should only be one foot.

Q.Will the contractor need to contact 811?????
A. Yes, contractor shall contact 811 as well as SFA Physical Plant.

Q. Do you have an additional contact for paver company?
A. Yes, see below:
Allen Tiller
(817) 980-4377 - mobile
wausautexas@outlook.com

Q. Will the site allow large truck access?
A. Yes. Contractor can only enter site on North side.

Q. Will a pump truck be needed?
A. No, but this depends on where contractor starts work at site.

STEPHEN F. AUSTIN STATE UNIVERSITY
Invitation To Bid #PLAZA RENOVATION-2019
Addendum No. 1
CONTINUATION PAGE

Q.Is SFA restricting contract pour time?
A. No.

Q. Who does contractor send requests for information (RFI) to?
A. Bruce Lanham, construction manager.

Q. Is contractor required to do landscaping?
A. No. SFA will do landscaping. Contractor will need to backfill the form.

Q.Will the black iron fencing need to be removed?
A. No.

Q. What are the measurement requirements for the traffic pathways related to fencing at the site?
A. Maintain six-foot wide traffic pathways at a minimum. Approval by SFA construction manager is required on any barriers setup.

Q. Will SFA be responsible for the installation and anchoring of the benches?
A. Yes.

SPECIFICATIONS
SFA will be issuing a subsequent Addendum to include the cut sheets for the owner supplied bollards.

INVITATION TO BID #PLAZA RENOVATION-2019

PRE-BID MEETING HELD November 19, 2019 at 10:00am

SIGN IN SHEET

Company Name: Cox Contractors Email: shelby@coxcontractors.com

Representative Name: Joseph Owens Phone: 936 645 7340 Fax: _____

Address: 4720 E Main St. City: Nacogdoches St/Zip: TX, 75961

CONTACT FOR HUB PAPERWORK (name, phone, email): Shelby, (936) 462-0388, shelby@coxcontractors.com

---

Company Name: _____ Email: _____

Representative Name: _____ Phone: _____ Fax: _____

Address: _____ City: _____ St/Zip: _____

CONTACT FOR HUB PAPERWORK (name, phone, email): _____

Company Name: _____ Email: _____

Representative Name: _____ Phone: _____ Fax: _____

Address: _____ City: _____ St/Zip: _____

CONTACT FOR HUB PAPERWORK (name, phone, email): _____

Please Print Legibly

INVITATION TO BID #PLAZA RENOVATION-2019

PRE-BID MEETING HELD November 19, 2019 at 10:00am

SIGN IN SHEET

Company Name: Two Fifteen Consulting Email: michael@twofifteen.net

Representative Name: Michael Delaney Phone: 936-569-0505 Fax:

Address: 412 North St. City: Nacogdoches St/Zip: TX 75961

CONTACT FOR HUB PAPERWORK (name, phone, email):

Company Name: Gonzales Commercial Electric Inc. Email: Steveh@gonzalesce.com

Representative Name: Steve Hughes Phone: 713-826-4882 Fax:

Address: 5235 Milwee City: Houston, Tx St/Zip: 77092

CONTACT FOR HUB PAPERWORK (name, phone, email):

Company Name: Email:

Representative Name: Phone: Fax:

Address: City: St/Zip:

CONTACT FOR HUB PAPERWORK (name, phone, email):

Please Print Legibly

INVITATION TO BID #PLAZA RENOVATION-2019

PRE-BID MEETING HELD November 19, 2019 at 10:00am

SIGN IN SHEET

Company Name: KDW Email: KVAUGHT@JEKCC.COM

Representative Name: Kathy VAUGHT Phone: 9365643329 Fax:

Address: 312 Old Tyler Rd City: Nacogdoches St/Zip: TX 75962

CONTACT FOR HUB PAPERWORK (name, phone, email): Kathy VAUGHT KVAUGHT@JEKCC.COM

Company Name: KDW Email: ROBERT@JEKCC.COM

Representative Name: ROBERT HILEMAN Phone: 936 564-3329 Fax:

Address: 312 OLD TYLER ROAD City: NACOGDOCHES St/Zip: TX 75961

CONTACT FOR HUB PAPERWORK (name, phone, email): KATHY VAUGHT KVAUGHT@JEKCC.COM

Company Name: Email:

Representative Name: Phone: Fax:

Address: City: St/Zip:

CONTACT FOR HUB PAPERWORK (name, phone, email):

Please Print Legibly

INVITATION TO BID #PLAZA RENOVATION-2019

PRE-BID MEETING HELD November 19, 2019 at 10:00am

SIGN IN SHEET

Company Name: Casey Slone Construction Email: casey@caseyslonconstruction.com

Representative Name: Dustin Bobbitt Phone: 903-503-3733 Fax: _____

Address: PO Box 1614 City: Marshall St/Zip: TX 75671

CONTACT FOR HUB PAPERWORK (name, phone, email): Casey Slone, 903-503-3733, casey@caseyslonconstruction.com

---

Company Name: _____ Email: _____

Representative Name: _____ Phone: _____ Fax: _____

Address: _____ City: _____ St/Zip: _____

CONTACT FOR HUB PAPERWORK (name, phone, email): _____

Company Name: _____ Email: _____

Representative Name: _____ Phone: _____ Fax: _____

Address: _____ City: _____ St/Zip: _____

CONTACT FOR HUB PAPERWORK (name, phone, email): _____

Please Print Legibly

INVITATION TO BID #PLAZA RENOVATION-2019

PRE-BID MEETING HELD November 19, 2019 at 10:00am

SIGN IN SHEET

Company Name: Precision Site Services Email: dlewis@precisionsiteservices.com

Representative Name: Eric Phone: 281-580-1432 Fax: 281-587-2662

Address: PO Box 681271 City: Houston St/Zip: TX 77268

CONTACT FOR HUB PAPERWORK (name, phone, email): Delaina Lewis 281-580-1432 dlewis@precisionsiteservices.com

Company Name: Email:

Representative Name: Phone: Fax:

Address: City: St/Zip:

CONTACT FOR HUB PAPERWORK (name, phone, email):

Company Name: Email:

Representative Name: Phone: Fax:

Address: City: St/Zip:

CONTACT FOR HUB PAPERWORK (name, phone, email):

Please Print Legibly

STEPHEN F. AUSTIN STATE UNIVERSITY

NACOGDOCHES, TEXAS

INVITATION TO BID

FAILURE TO SIGN WILL DISQUALIFY BID

Bid No. PLAZA RENOVATION-2019

Due Date: 12/04/19 at 3:00 P.M.

Signature City Zip

Printed Name

VENDOR NAME AND ADDRESS

Name of Firm

Mailing Address

City State Zip

PHONE/FAX

Phone

FAX

EMAIL

Show bid opening and bid invitation number in lower left hand corner of sealed bid envelope and return sealed bids to:

Stephen F. Austin State University
P. O. Box 13030, SFA Station
2124 Wilson Drive
Nacogdoches, Texas 75962-3030
Phone (936) 468-2206
FAX (936) 468-4282 (See 2.3 reverse side)

See Instruction 2.11 on Back for Vendor ID Number
Is Vendor a State of Texas certified HUB? ☐ Yes

Delivery in _____ Days Cash Disc._____ % _____Days

Check all that apply if Preference Claimed under Rule 34 TAC 20.38

__ Supplies, materials or equipment: produced in TX/offered by TX bidders*
__ Agricultural products grown in TX
__ Agricultural products offered by TX bidders*
__ USA produced supplies, materials or equipment
__ Products produced at facilities located on formerly contaminated property
__ Products of persons with mental or physical disabilities
__ Products made of recycled, remanufactured, or environmentally sensitive materials
__ Energy efficient products
__ Rubberized asphalt paving material
__ Recycled motor oil and lubricants
__ Products and services from economically depressed or blighted areas

*By signing this bid, bidder certifies that if a Texas address is shown as the address of the bidder, bidder qualifies as a Texas resident Bidder as defined in Rule 34 TAC 20.38.

IF QUOTING OTHER THAN THE REFERENCED ITEM(S) BELOW, BROCHURE AND/OR SPECIFICATIONS SHOULD BE ENCLOSED.
ALL BIDS WILL BE CONSIDERED F.O.B. DESTINATION UNLESS OTHERWISE NOTED.

AWARD NOTICE: Stephen F. Austin State University (SFA) reserves the right to make an award on the basis of low line item bid, low total of line items, or in any other combination that will serve the best interest of SFA and to reject any and all bid items in the sole discretion of SFA.

Item No.	Description	Qty. & Unit	Unit Price	Extension
	Quote price on quantity and unit of measure, extend and show total. If error in extension, unit price shall govern. Items for state use are exempt from state sales and federal excise tax. Do not include tax in your bid.			
	BASE BID Provide all labor, tools, materials, equipment, demolition, insurance and related service to renovate and reconstruct the Raguet Street and Pedestrian Plaza intersection on the campus of Stephen F. Austin State University in accordance with the specifications, project manual and drawings herein and attached. **MANDATORY PRE-BID CONFERENCE** A MANDATORY pre-bid conference and site visit is scheduled for **10:00a.m., Tuesday, November 19, 2019** in the Physical Plant Training Room, 2104 Wilson Drive, Nacogdoches, Texas on the campus of Stephen F. Austin State University. A site visit is scheduled after the pre-bid meeting. ***Failure to attend the pre-bid conference and site visit will forfeit consideration of the Respondent's bid.***	1 LOT	_____	_____

STEPHEN F. AUSTIN STATE UNIVERSITY
Invitation To Bid #PLAZA RENOVATION-2019
CONTINUATION PAGE

SPECIFICATIONS

The Engineer's Project Manuals and Drawings are attached in Exhibit A.

CAMPUS MAP
Campus map is attached in Exhibit B.

HUB SUBCONTRACTING PLAN
Each respondent is required to make a good faith effort to subcontract with historically underutilized businesses and shall submit a HUB Subcontracting Plan using the HUB Subcontracting Plan documents provided in Exhibit C.

Stephen F. Austin State University is committed to making a good faith effort to increase business with historically underutilized businesses (HUBs) by contracting with HUBs either directly or indirectly through subcontracting opportunities. Respondents are encouraged to actively seek to subcontract or partner with HUBs in an effort to create an environment that actively acknowledges and values diversity.

The University has determined that subcontracting opportunities are probable under this contract.

The University's HUB goal for this procurement is:
32.9% for special trades.

Each HUB subcontracting plan will be evaluated independently of the response. If the HSP does not reflect a good faith effort to subcontract with HUBs, the entire response will be disqualified.

All questions regarding the HUB Subcontracting Plan may be directed to Kay Johnson, Director of Procurement & Property Services/HUB Coordinator, 936-468-4037, johnsondk6@sfasu.edu

Failure to submit the HUB Subcontracting Plan will disqualify the entire response from consideration.

PROJECT COMPLETION
The University requires that the job be performed and completed, including clean-up by March 6, 2020. Work shall begin around January 2, 2020 after award of bid and is to be coordinated with the Owners Designated Representative.

CONTACT INFORMATION
Questions relating to the solicitation document, HUB subcontracting plan, or the response may be directed to Director of Procurement, Kay Johnson, 936-468-4037, johnsondk6@sfasu.edu.

Questions pertaining to the drawings and specifications may be directed to Bruce Lanham, Owner's Designated Representative (ODR) 936-468-4574.

STEPHEN F. AUSTIN STATE UNIVERSITY
Invitation To Bid #PLAZA RENOVATION-2019
CONTINUATION PAGE

BID BOND

The cost of all bonds must be included in the response.

A bid bond or bid security in the form of a Certified or Cashier's check on a State or National Bank in the State of Texas, or a Bid Bond from a Surety Company authorized to transact business in the State of Texas, and made payable to Stephen F. Austin State University **in the amount of 5% of the largest proposed amount** must accompany each response as a guarantee that, if awarded the Purchase Order, the Contractor will execute the required Performance and Payment Bonds, if required, in such form and with such Sureties as SFA may prescribe or approve.

Responses submitted without a bid bond or bid security will not be considered.

PERFORMANCE AND PAYMENT BONDS

The cost of all bonds must be included in the response.

Performance bonds are required on contracts exceeding $100,000. Payments bonds are required on contracts exceeding $25,000. Refer to Article V. in the Uniform General Conditions.

Should the Contractor fail to execute and return the required Performance and Payment Bonds within ten (10) days after the date of notice of award, the Bid Guarantee shall become the property of SFA, not as a penalty but as liquidated damages.

PARKING ON CAMPUS

All vehicles parked on the University campus must properly display a valid parking permit and comply with all University parking rules. The Parking and Traffic Office supervises and coordinates all parking transportation and traffic related functions on the campus. Permits expire each August 31.

Contractor shall be responsible for obtaining parking permits from the Parking and Traffic Office and for resolving, should they arise, any parking regulation disputes and violations. The Parking and Traffic Office telephone number is 936-468-7275.

CONTRACT DOCUMENTS

After award, the University will issue a General Contractor contract document. This base contract document will be “AIA 101 1997 Standard Form of Agreement between Owner and Contractor where the basis of payment if a stipulated sum”. The contract will be modified by SFA as needed to be in compliance with the Uniform and Supplementary General Conditions and state law.

UNIFORM GENERAL CONDITIONS

The attached Uniform General Conditions (UGC), Exhibit D, is an integral part of this document. The respondent is responsible for reading and being familiar with all of the requirements of the Uniform General Conditions. Failure to consider all the requirements of the UGC does not relieve the Contractor from the obligation to fulfill all requirements of the UGC.

LIQUIDATED DAMAGES

The liquidated damages are standard in our contract document at $1000 per calendar day.

PREVAILING WAGE RATES

In accordance with Texas Gov't Code 2258.022, Stephen F. Austin State University completed a determination of wage rates for Nacogdoches County. The attached "Minimum Wage Rate Determination" provides additional documentation about the determination and requirements for compensation. The total hourly compensation to each worker must equal or exceed the minimum wage rates stated in the "2015 SFA Prevailing Wage" attachment, Total Column. See Exhibit E.

The attached "Worker Wage Rate Form" is to be used by the construction manager and all subcontractors engaged in this project. The completed notice must be accepted by all workers involved in the project and delivered to the Physical Plant prior to substantial completion or with pay applications. Separate Worker Wage Rates Forms are to be completed for each worker engaged in multiple classifications. See Exhibit E.

For additional information regarding the applicability of Prevailing Wage Rates refer to Uniform General Conditions, Article 2, Paragraph 2.2.

U.S. DEPARTMENT OF HOMELAND SECURITY'S E-VERIFY SYSTEM

By entering into this Contract, the Contractor certifies and ensures that it utilizes and will continue to utilize, for the term of this Contract, the U.S. Department of Homeland Security's E-Verify system to determine the eligibility of:

1. All persons employed to perform duties within Texas, during the term of the Contract; and
2. All persons (including subcontractors) assigned by the Contractor to perform work pursuant to the Contract, within the United States of America.

The Contractor shall provide, upon request of SFASU, an electronic or hardcopy screenshot of the confirmation or tentative non-confirmation screen containing the E-Verify case verification number for attachment to the Form I-9 for the three most recent hires that match the criteria above, by the Contractor, and Contractor's subcontractors, as proof that this provision is being followed. **If this certification is falsely made, the Contract may be immediately terminated, at the discretion of SFASU and at no fault to SFASU, with no prior notification. The Contractor shall also be responsible for the costs of any re-solicitation that SFASU must undertake to replace the terminated Contract.**

SMOKING, VAPING AND USE OF TOBACCO PRODUCTS
Stephen F. Austin State University is a tobacco and vape free campus.

ISRAEL NON-BOYCOTT VERIFICATION
To the extent that Section 2270.002, Texas Government Code applies, Contracting Party hereby represents, verifies, and warrants that it does not boycott Israel and will not boycott Israel during the term of the Agreement, as that term is defined by Section 808.001(1), *Texas Government Code*.

CONTRACTS WITH FOREIGN TERRORIST ORGANIZATIONS PROHIBITED
Pursuant to Section 2252.152, Texas Government Code, and to the extent applicable, Contracting Party hereby represents, verifies, and warrants that it does not do business with Iran, Sudan, or any foreign terrorist organization identified on a list prepared and maintained under Section 806.051, 807.051, or 2252.153, Texas Government Code.

REQUIRED SUBMITTALS
1) Signed Invitation to Bid
2) Acknowledgement of Addenda, if any
3) Bid Bond
4) HUB Subcontracting plan
5) Non-Collusion Affidavit

ITEMS BELOW APPLY TO AND BECOME PART OF TERMS AND CONDITIONS OF QUOTATIONS. ANY EXCEPTIONS THERETO MUST BE IN WRITING AND SUBMITTED WITH INVITATION TO BID.

1. **BIDDER AFFIRMATIONS:** Signing this bid with a false statement is a material breach of contract and shall void the submitted bid or any resulting contracts. By signature hereon affixed, the bidder hereby certifies that:

1.1 The bidder has not given, offered to give, nor intends to give at any time hereafter any economic opportunity, future employment, gift, loan, gratuity, special discount, trip, favor, or service to a public servant in connection with the submitted bid.

1.2 Pursuant to 15 U.S.C. Sec. 1, et seq. And Tex. Bus. & Comm. Code Sec 15.01, et seq. neither the bidder or the firm, corporation, partnership, or institution represented by the bidder, or anyone acting for such firm, corporation, or institution has violated the antitrust laws of this State or the Federal antitrust laws, nor communicated directly or indirectly the bid made to any competitor or any other person engaged in such line of business.

1.3 Pursuant to Texas Government Code, Title 10, Subtitle D, Section 2155.004(a), the bidder has not received compensation for participation in the preparation of the specifications for this solicitation.

1.4 If applicable, pursuant to Texas Family Code, Title 5, Subtitle D, Section 231.006(d), regarding child support, the bidder certifies that the individual or business entity named in this bid is not ineligible to receive the specified payment and acknowledges that this contract may be terminated and payment may be withheld if this certification is inaccurate. Furthermore, any bidder subject to Section 231.006 must include names and Social Security numbers of each person with at least 25% ownership of the business entity submitting the bid. This information must be provided prior to award.

1.5 Pursuant to Texas Government Code, Title 10, Subtitle D, Section 2155.004(b), the vendor certifies that the individual or business entity named in this bid or contract is not ineligible to receive the specified contract and acknowledges that this contract may be terminated and payment withheld if this certification is inaccurate.

1.6 Bidder agrees that pursuant to Section 403.0551, Texas Government Code, any payments due under this contract will be applied towards any debt, including but not limited to delinquent taxes and child support, that is owed to the State of Texas or any agency of the State of Texas, until such debt or delinquent taxes are paid in full.

1.7 Bidder certifies that they are in compliance with Texas Government Code, Title 6, Subtitle B, Section 669.003, relating to contracting with executive head of a State agency. If Section 669.003 applies, the bidder will complete the following information in order for the bid to be evaluated:

Name of former Executive:

_____

Name of State Agency:

_____

Date of separation from State Agency:

_____

Position with bidder:

_____

Date of employment with bidder:

_____

1.8 Bidder agrees to comply with Texas Government Code 2155.4441, relating to the use of service contracts for products produced in the State of Texas.

1.9 By signature hereon, the Respondent hereby certifies that he/she is not currently delinquent in the payment of any franchise taxes owed the State of Texas.

2. **BIDDING REQUIREMENTS:**

2.1 Bids should be submitted on this form. Each bid shall be placed in a separate envelope completely and properly identified. When sending bids via overnight delivery, bidder is advised to confirm whether SFA delivery location is a guaranteed AM delivery.

2.2 SFA offers facsimile or email service as a convenience only. The only telephone number for FAX submission of bids is 936-468-4282. The only email for email submission of bids is bids@sfasu.edu. The University shall not be responsible for bids or portions of bids received late, illegible, incomplete, or otherwise non-responsive due to failure of electronic equipment, technology error, or operator error. Confirmation of facsimile or email bids is not required.

2.3 Bids must be time stamped in the SFA Procurement & Property Services Office on or before the hour and date specified for the bid opening. Late bids will not be considered under any circumstances. Late bids properly identified will be returned to the bidder unopened.

2.4 Bids are requested to be firm for acceptance for a minimum of 30 days from opening date. Bid cannot be altered or amended after opening time. No bid can be withdrawn after opening time without the approval of the University based on a written acceptable reason.

2.5 Telephone quotations are not acceptable when in response to this Invitation To Bid.

2.6 Stephen F. Austin State University reserves the right to accept or reject all or any part of any bids, to waive minor technicalities, to re-advertise if deemed necessary, and to award the bid to best serve the interests of the University.

2.7 All electrical items must meet all applicable OSHA standards and regulations, and bear the appropriate listing from US, FMRC or NEMA.

2.8 All items shall be new, in first class condition, with containers suitable for shipment and storage. New shall not be construed as excluding recycled or remanufactured products.

2.9 Any catalog, brand name or manufacturer's reference used in this bid is descriptive (not restrictive).

2.10 Stephen F. Austin State University will not be bound by any oral statement or representation contrary to the written specifications of this ITB and any associated addenda.

2.11 Bids should give Payee ID Number, full firm name and address of bidder. The Payee ID Number is the taxpayer number assigned and used by the Comptroller of Public Accounts of Texas. If this number is not known, complete the following:

Enter Federal Employer's Identification Number

_____

Sole Owner should also enter SSN# below

_____

3. **TIE BIDS** - Awards will be made in accordance with Rule 34 TAC 20.36 (b) (3) and 20.38 (preferences).

4. **PATENTS OR COPYRIGHTS** – The Contractor agrees to protect Stephen F. Austin State University from claims involving infringement of patents or copyrights.

5. **PAYMENT** - Vendor shall submit an itemized invoice showing Purchase Order Number. Payment will be made Net 30 from date of receipt of goods/services or invoice, whichever is later. Late fees will be incurred in accordance with Texas Government Code 2251.

6. **DELIVERY:**

6.1 Bids should show the number of days required to place material in designated location under normal conditions. Failure to state delivery time obligates bidder to complete delivery in 14 calendar days. A five day difference in delivery promise may break tie bids. Unrealistic short or long delivery promises may cause the bid to be disregarded.

6.2 Delivery shall be made during normal working hours only, unless prior approval for early or late delivery has been obtained.

6.3 If delay is foreseen, contractor shall give written notice. The University has the right to extend delivery date if reasons appear valid. Contractor must keep the University advised at all times of status of order. Default in promised delivery (without accepted reasons) or failure to meet specifications, authorizes the University to purchase supplies elsewhere and charge full increase, if any, in cost and handling to defaulting contractor.

6.4 No substitutions or cancellations are permitted without prior written approval.

7. **ALTERNATE DISPUTE RESOLUTION:**
Pursuant to Chapter 2260 of the Texas Government Code, any dispute arising under a contract for goods and services for which this chapter applies must be resolved under the provisions of this chapter.

8. **PUBLIC INFORMATION ACT:**
Information, documentation, and other material in connection with this solicitation or any resulting contract may be subject to public disclosure pursuant to Chapter 552 of the Texas Government Code (the "Public Information Act").

7. **NOTE TO BIDDERS:**

7.1 Any terms and conditions attached to a solicitation will not be considered unless specifically referred to on this solicitation and may result in disqualification.

7.2 The Contractor shall defend, indemnify and hold harmless the State of Texas, all of its officers, agents and employees from and against all claims, actions, suits, demands, proceedings, costs, damages, and liabilities, arising out of, connected with, or resulting from any acts or omissions of contractor or any agent, employee, subcontractor, or supplier in the execution or performance of this contract.

7.3 Contractor understands that acceptance of funds under this contract acts as acceptance of the authority of the State Auditor's Office or any successor agency, or Stephen F. Austin's Internal Audit Services, to conduct an audit or investigation in connection with those funds. Contractor further agrees to cooperate fully with the State Auditor's Office or its successor, or Stephen F. Austin's Internal Audit Services in the conduct of the audit or investigation, including providing all records requested. Contractor will ensure that this clause concerning the authority to audit funds received indirectly by subcontractors through Contractor and the requirement to cooperate is included in any subcontract awards.

EXHIBIT A

PROJECT MANUALS AND DRAWINGS

RAGUET ST. CENTRAL CAMPUS PLAZA REPLACEMENT

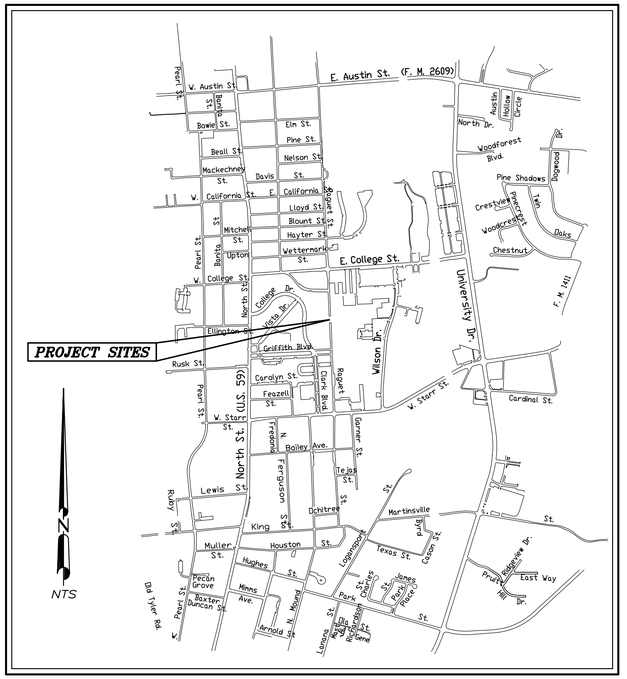

STEPHEN F. AUSTIN STATE UNIVERSITY

NACOGDOCHES, TEXAS

SHEET INDEX

COVER SHEET
C-101 SITE DEMOLITION PLAN
C-200 SITE GRADING, PAVING, AND FEATURE PLAN
C-800 SITE WATER MAIN AND SERVICE REPLACEMENT
C-900 SITE DETAILS
C-901 NOTES AND SPECIFICATIONS

Engineer Seal:

10/17/2019

STATE OF TEXAS
MICHAEL P. DELANEY
120455
LICENSED
PROFESSIONAL ENGINEER

TWO FIFTEEN CONSULTING
ENGINEERS + SURVEYORS

412 North St.
Nacogdoches, TX 75961
p: 936-569-0505

TBPE F-17461
TBPLS 10194339

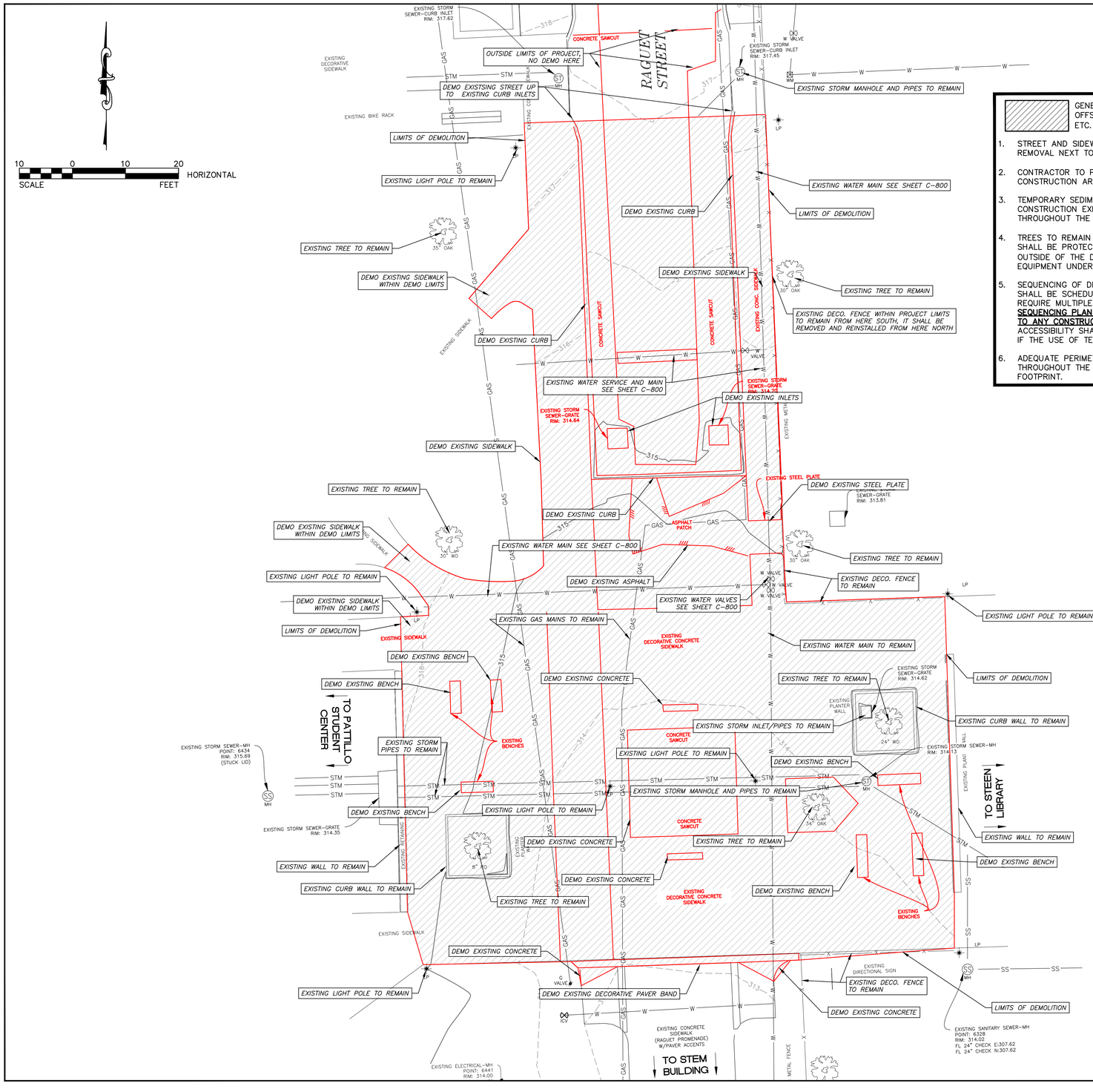

GENERAL DEMOLITION AREA: DEMOLISH, REMOVE AND DISPOSE OF OFFSITE ALL PAVEMENTS, FOUNDATIONS, WALKS, SIGNS, POLES, BENCHES, ETC. IN THIS AREA (UNLESS OTHERWISE NOTED).

1. STREET AND SIDEWALK DEMOLITION SHALL BE COORDINATED WITH SFASU STAFF. ALL PAVEMENT REMOVAL NEXT TO PAVEMENTS THAT WILL REMAIN MUST BE SAW-CUT NEATLY.
2. CONTRACTOR TO PROVIDE TEMPORARY DRIVING AND/OR WALKING ALL WEATHER SURFACES AROUND CONSTRUCTION AREAS AS DIRECTED BY OWNER, ARCHITECT, OR ENGINEER DURING CONSTRUCTION.
3. TEMPORARY SEDIMENT CONTROL FENCING AROUND THE SITE AND THE STORM INLETS, AND CONSTRUCTION EXITS, SHALL BE INSTALLED PRIOR TO DEMOLITION ACTIVITIES AND MAINTAINED THROUGHOUT THE ENTIRE PROJECT AND UNTIL SUBSTANTIAL GROUND COVER IS ESTABLISHED.
4. TREES TO REMAIN THAT ARE WITHIN, OR WITHIN 10' OF, THE DEMOLITION AND CONSTRUCTION AREAS SHALL BE PROTECTED BY INSTALLING ORANGE CONSTRUCTION FENCE AROUND THE ENTIRE TREE OUTSIDE OF THE DRIP LINE OF THE TREE CANOPY (WHERE POSSIBLE). DO NOT PARK OR OPERATE EQUIPMENT UNDER THE CANOPY OF ANY TREE TO REMAIN WITHOUT CONSENT FROM OWNER.
5. SEQUENCING OF DEMOLITION ACTIVITIES SHALL BE COORDINATED BY G.C. DEMOLITION ACTIVITIES SHALL BE SCHEDULED TO COINCIDE WITH PROPOSED IMPROVEMENTS. DEMOLITION ACTIVITIES MAY REQUIRE MULTIPLE MOBILIZATION EFFORTS THROUGHOUT CONSTRUCTION. **A CONSTRUCTION SEQUENCING PLAN SHALL BE PROVIDED BY THE CONTRACTOR TO THE OWNER FOR APPROVAL PRIOR TO ANY CONSTRUCTION ACTIVITIES.** CAMPUS FUNCTIONALITY, PEDESTRIAN CIRCULATION, AND ACCESSIBILITY SHALL BE MAINTAINED AT ALL POSSIBLE OPPORTUNITIES DURING CONSTRUCTION, EVEN IF THE USE OF TEMPORARY PEDESTRIAN GROUND SURFACES ARE NECESSARY.
6. ADEQUATE PERIMETER CONSTRUCTION FENCING SHALL BE ERECTED AND MAINTAINED AT ALL TIMES THROUGHOUT THE PROJECT TO KEEP NON-CONSTRUCTION PERSONAL OUT OF THE CONSTRUCTION FOOTPRINT.

General Notes

1. EXISTING UTILITY LOCATIONS AND/OR MATERIALS SHOWN ON THE PLANS ARE APPROXIMATE. THE CONTRACTOR IS HEREBY NOTIFIED THAT ALL EXISTING UTILITIES, WHETHER BURIED OR OVERHEAD, MAY OR MAY NOT BE SHOWN AND THAT THE CONTRACTOR IS RESPONSIBLE FOR LOCATING AND PROTECTING ALL UTILITIES WITHIN THE PROJECT AREA. THE CONTRACTOR SHALL ALSO BE RESPONSIBLE FOR REPAIRING AND/OR REPLACING ANY AND ALL UTILITIES DAMAGED BY THE CONTRACTOR'S OPERATIONS AND THE COST(S) FOR WHICH SHALL BE BORNE BY THE CONTRACTOR.
2. THE CONTRACTOR IS HEREBY NOTIFIED THAT DANGEROUS UTILITIES MAY EXIST IN THE PROJECT AREA. THESE MAY INCLUDE BUT ARE NOT LIMITED TO: OVERHEAD OR UNDERGROUND ELECTRIC LINES, TELEPHONE LINES, FIBER-OPTIC LINES, AND GAS LINES.
3. THE CONTRACTOR SHALL NOTIFY THE SFASU PPD STAFF FOR INSPECTION PRIOR TO COVERING UNDERGROUND IMPROVEMENTS, BEFORE POURING BUILDING SLABS, OR MAKING ANY UTILITY TAPS OR CURB CUTS.
4. THIS IS NOT A BOUNDARY SURVEY.
5. THE CONTRACTOR IS RESPONSIBLE FOR PROVIDING EROSION CONTROL (SILT FENCING) ON ALL DOWNHILL SLOPE AREAS OF THIS SITE.

No.	Revision/Issue	Date
1	ISSUED FOR CONSTRUCTION	10/17/19

TWO FIFTEEN CONSULTING
ENGINEERS + SURVEYORS

412 North St.
Nacogdoches, TX 75961
p: 936-569-0505

TBPE F-17461
TBPLS 10194339

Engineer Seal:

10/17/2019

STATE OF TEXAS
MICHAEL P DELANEY
120455
REGISTERED PROFESSIONAL ENGINEER

SITE DEMOLITION PLAN

SFASU RAGUET ST. PLAZA RECONSTRUCTION

STEPHEN F. AUSTIN STATE UNIVERSITY NACOGDOCHES, TEXAS

Scale: SEE PLAN	Issue Date: 10/17/2019
Drawn By: HCP/CMS	Checked By: MPD
File: 19047_101.dwg	Drawing No. **C-101**

THIS DRAWING AND OTHER RELATED DOCUMENTS, INCLUDING DOCUMENTS ON ELECTRONIC MEDIA, WERE PREPARED BY TWO FIFTEEN CONSULTING AND SHALL REMAIN THE PROPERTY OF TWO FIFTEEN CONSULTING. ALL INFORMATION SHALL BE USED ONLY FOR DESCRIBING, CONSTRUCTING, OR INSTALLING THE WORK SHOWN AT THE SITE OF THE WORK SPECIFIED HEREON. ANY OTHER USE OF THIS DRAWING, INCLUDING WITHOUT LIMITATION, ANY REPRODUCTION OR ALTERATION IS STRICTLY PROHIBITED, AND TWO FIFTEEN CONSULTING SHALL BE INDEMNIFIED FROM LIABILITY ARISING FROM THE CONSTRUCTION, USE, OR RESULT OF SUCH UNAUTHORIZED USE OR CHANGES.

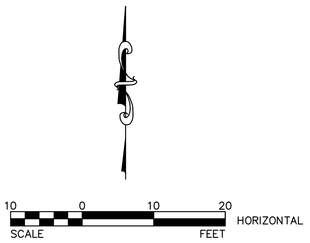

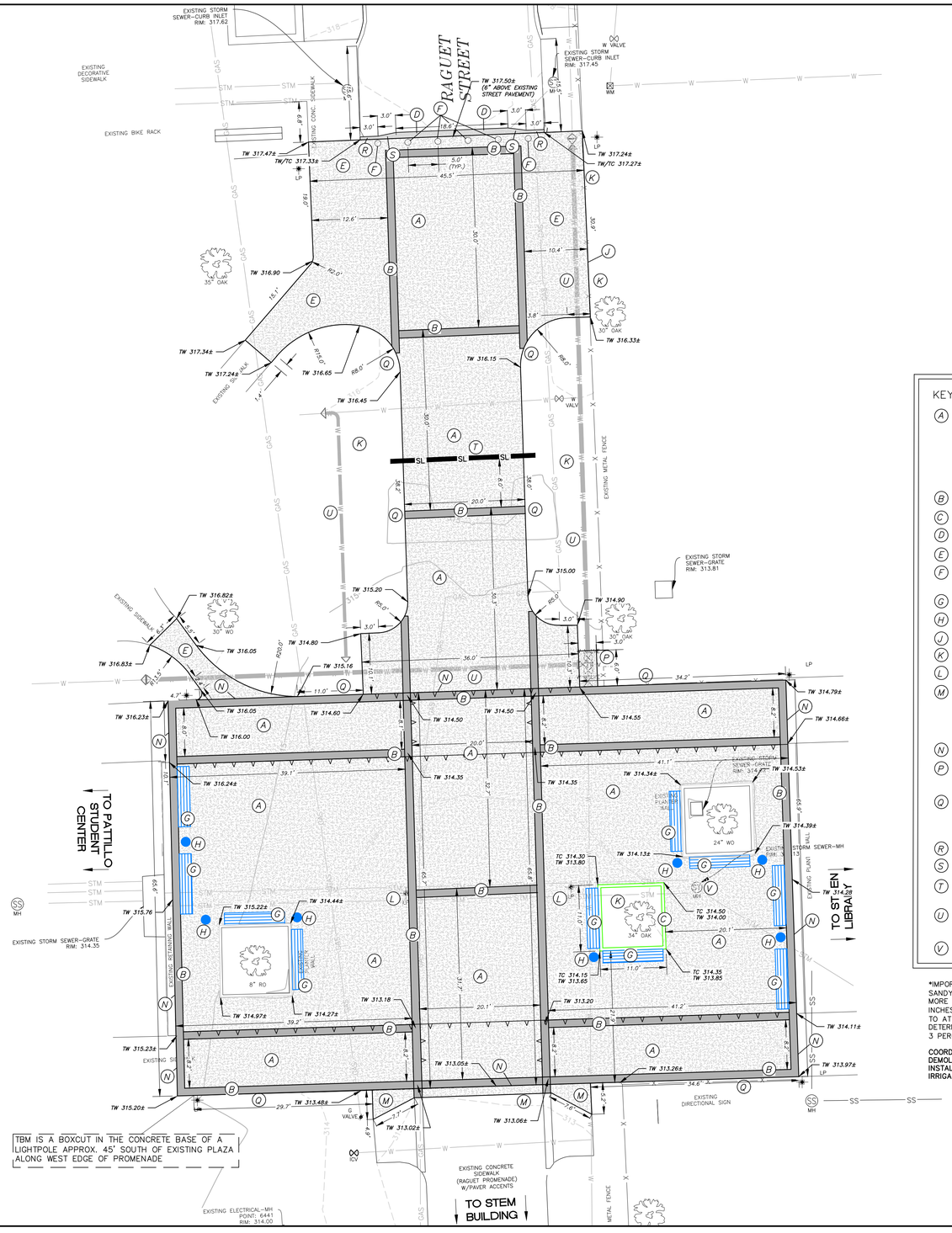

GRADING KEY

TW = TOP OF WALK
TWALL = TOP OF WALL
TC = TOP OF CURB
± = MATCH EXISTING

GRADE BREAK = —V—V—
EXISTING CONTOUR = —XX—
PROPOSED CONTOUR = —[XX]—

KEY NOTES:

(A) PROPOSED EM. VEHICLE ACCESS CONCRETE SIDEWALK WITH DECORATIVE PAVER ACCENTS, 5" CONCRETE PAVEMENT (LIGHT-DUTY), 3500 PSI @ 28 DAYS, REINFORCED WITH #4@18" O.C.E.W. ON TOP OF 6" OF IMPORTED SELECT FILL (SEE SELECT FILL NOTE BELOW). CONTRACTION JOINTS AND JOINT SPACING, CONCRETE FINISH, AND SEALANT AS SHOWN IN DETAIL, AND ALL MATCHING EXISTING RAGUET PROMENADE ADJACENT TO AND SOUTH OF THIS PROJECT. MAINTAIN 5" THICKNESS UNDER PAVER ACCENTS.

(B) PROPOSED DECORATIVE PAVER BAND (SEE DETAIL)

(C) PROPOSED 6" CONCRETE CURB (SEE DETAIL)

(D) PROPOSED SPECIAL CONCRETE (LAYBACK) CURB (SEE DETAIL)

(E) PROPOSED STANDARD CONCRETE SIDEWALK (SEE DETAIL)

(F) PROPOSED BOLLARDS (FURNISHED BY OWNER, INSTALLED BY CONTRACTOR) 5' C-C SPACING

(G) PROPOSED BENCHES (BY OWNER)

(H) PROPOSED CHARGING POST (BY OWNER)

(J) REMOVE AND REINSTALL DECORATIVE FENCE ALONG PAVEMENT EDGE

(K) SOD, MULCH AND IRRIGATION (BY OWNER)

(L) LIGHT POLE TO REMAIN

(M) SAW CUT AND REMOVE EXISTING CONCRETE PAVEMENT AND PAVER BAND AS SHOWN AND EXTEND NORTH/SOUTH PAVER BANDS AS SHOWN. RE-PAVE THE REMAINDER AS EM. VEHICLE ACCESS CONCRETE SIDEWALK. DOWEL INTO EXISTING SIDEWALK ALONG SOUTH EDGE #5 @ 18" O.C.E.W. (8" EMBEDMENT W/ EPOXY)

(N) PROPOSED CONCRETE EXPANSION JOINT (SEE DETAIL)

(P) PROPOSED CONCRETE APRON AROUND WATER VALVES. USE STANDARD SIDEWALK PAVEMENT. TOP OF PAVEMENT SHALL BE FLUSH WITH SURROUNDING PAVEMENTS, ADJUST VALVE BOXES AS NEEDED.

(Q) PROPOSED UNIT PAVER RETAINING EDGE. USE COMMERCIAL GRADE GALVANIZED OR POWDER COATED LANDSCAPE EDGING TO RETAIN PAVERS AT THE EDGES WHERE NOT ADJACENT TO OTHER PAVEMENTS. TOP OF EDGING SHALL BE FLUSH OR 1/2" BELOW TOP OF PAVERS.

(R) TYPICAL CURB (MATCH EXISTING RAGUET STREET CURB PROFILE)

(S) TRANSITION TO SPECIAL LAYBACK CURB (OVER 3 LF)

(T) 4" PVC PIPE SLEEVE (EMPTY, FOR FUTURE USE) BURIED 12" DEEP W/CAPS AT BOTH ENDS (NOT GLUED)

(U) WATER PIPE REPLACEMENT (BY OWNER). SEE SHEET C-800 FOR SPECIFICS. CONTRACTOR MUST COORDINATE WITH OWNER AND PHASE DEMOLITION AND CONSTRUCTION WITH WATER PIPE REPLACEMENT

(V) ADJUST MANHOLE RING AND COVER TO NEW TOP OF PAVEMENT GRADES

*IMPORTED SELECT SUBGRADE PAVEMENT FILL SHALL BE CLAYEY SAND (SC) OR SANDY LEAN CLAY (CL) FREE OF ORGANIC MATERIAL, 4≤PI≥18, LL<40 AND NO MORE THAN 60% PASSING 200 SIEVE, PLACED IN LIFTS NOT TO EXCEED 8 INCHES LOOSE AND 6" COMPACTED. FILL SHALL BE MECHANICALLY COMPACTED TO AT LEAST 95 PERCENT OF THE MATERIAL'S MAXIMUM DRY UNIT WEIGHT DETERMINED BY ASTM D 698 STANDARD EFFORT. FILL SOILS SHALL BE WITHIN 3 PERCENT OF THE MATERIAL'S OPTIMUM MOISTURE CONTENT.

COORDINATION NOTE: CONTRACTOR SHALL COORDINATE WITH OWNER TO PHASE DEMOLITION AND CONSTRUCTION WITH WORK REQUIRED FOR OWNER INSTALLATION OF PROPOSED BENCHES, CHARGING POSTS, SOD, MULCH, AND IRRIGATION, AND WATER PIPE REPLACEMENT.

General Notes

1. EXISTING UTILITY LOCATIONS AND/OR MATERIALS SHOWN ON THE PLANS ARE APPROXIMATE. THE CONTRACTOR IS HEREBY NOTIFIED THAT ALL EXISTING UTILITIES, WHETHER BURIED OR OVERHEAD, MAY OR MAY NOT BE SHOWN AND THAT THE CONTRACTOR IS RESPONSIBLE FOR LOCATING AND PROTECTING ALL UTILITIES WITHIN THE PROJECT AREA. THE CONTRACTOR SHALL ALSO BE RESPONSIBLE FOR REPAIRING AND/OR REPLACING ANY AND ALL UTILITIES DAMAGED BY THE CONTRACTOR'S OPERATIONS AND THE COST(S) FOR WHICH SHALL BE BORNE BY THE CONTRACTOR.
2. THE CONTRACTOR IS HEREBY NOTIFIED THAT DANGEROUS UTILITIES MAY EXIST IN THE PROJECT AREA. THESE MAY INCLUDE BUT ARE NOT LIMITED TO: OVERHEAD OR UNDERGROUND ELECTRIC LINES, TELEPHONE LINES, FIBER-OPTIC LINES, AND GAS LINES.
3. THE CONTRACTOR SHALL NOTIFY THE SFASU PPD STAFF FOR INSPECTION PRIOR TO COVERING UNDERGROUND IMPROVEMENTS, BEFORE POURING BUILDING SLABS, OR MAKING ANY UTILITY TAPS OR CURB CUTS.
4. THIS IS NOT A BOUNDARY SURVEY.
5. THE CONTRACTOR IS RESPONSIBLE FOR PROVIDING EROSION CONTROL (SILT FENCING) ON ALL DOWNHILL SLOPE AREAS OF THIS SITE.

No.	Revision/Issue	Date
1	ISSUED FOR CONSTRUCTION	10/17/19

TWO FIFTEEN CONSULTING
ENGINEERS + SURVEYORS
412 North St.
Nacogdoches, TX 75961
p: 936-569-0505
TBPE F-17461
TBPLS 10194339

Engineer Seal:

10/17/2019
STATE OF TEXAS
MICHAEL P. DELANEY
120455
LICENSED
PROFESSIONAL ENGINEER

SITE GRADING, PAVING, AND FEATURE PLAN

SFASU RAGUET ST. PLAZA RECONSTRUCTION STEPHEN F. AUSTIN STATE UNIVERSITY NACOGDOCHES, TEXAS

Scale:	Issue Date:
SEE PLAN	10/17/2019
Drawn By: HCP/CMS	Checked By: MPD
File: 19047_200.dwg	Drawing No. C-200

THIS DRAWING AND OTHER RELATED DOCUMENTS, INCLUDING DOCUMENTS ON ELECTRONIC MEDIA, WERE PREPARED BY TWO FIFTEEN CONSULTING AND SHALL REMAIN THE PROPERTY OF TWO FIFTEEN CONSULTING. ALL INFORMATION SHALL BE USED ONLY FOR DESCRIBING, CONSTRUCTING, OR INSTALLING THE WORK SHOWN AT THE SITE OF THE WORK SPECIFIED HEREON. ANY OTHER USE OF THIS DRAWING, INCLUDING WITHOUT LIMITATION, ANY REPRODUCTION OR ALTERATION IS STRICTLY PROHIBITED, AND TWO FIFTEEN CONSULTING SHALL BE INDEMNIFIED FROM LIABILITY ARISING FROM THE CONSTRUCTION, USE, OR RESULT OF SUCH UNAUTHORIZED USE OR CHANGES.

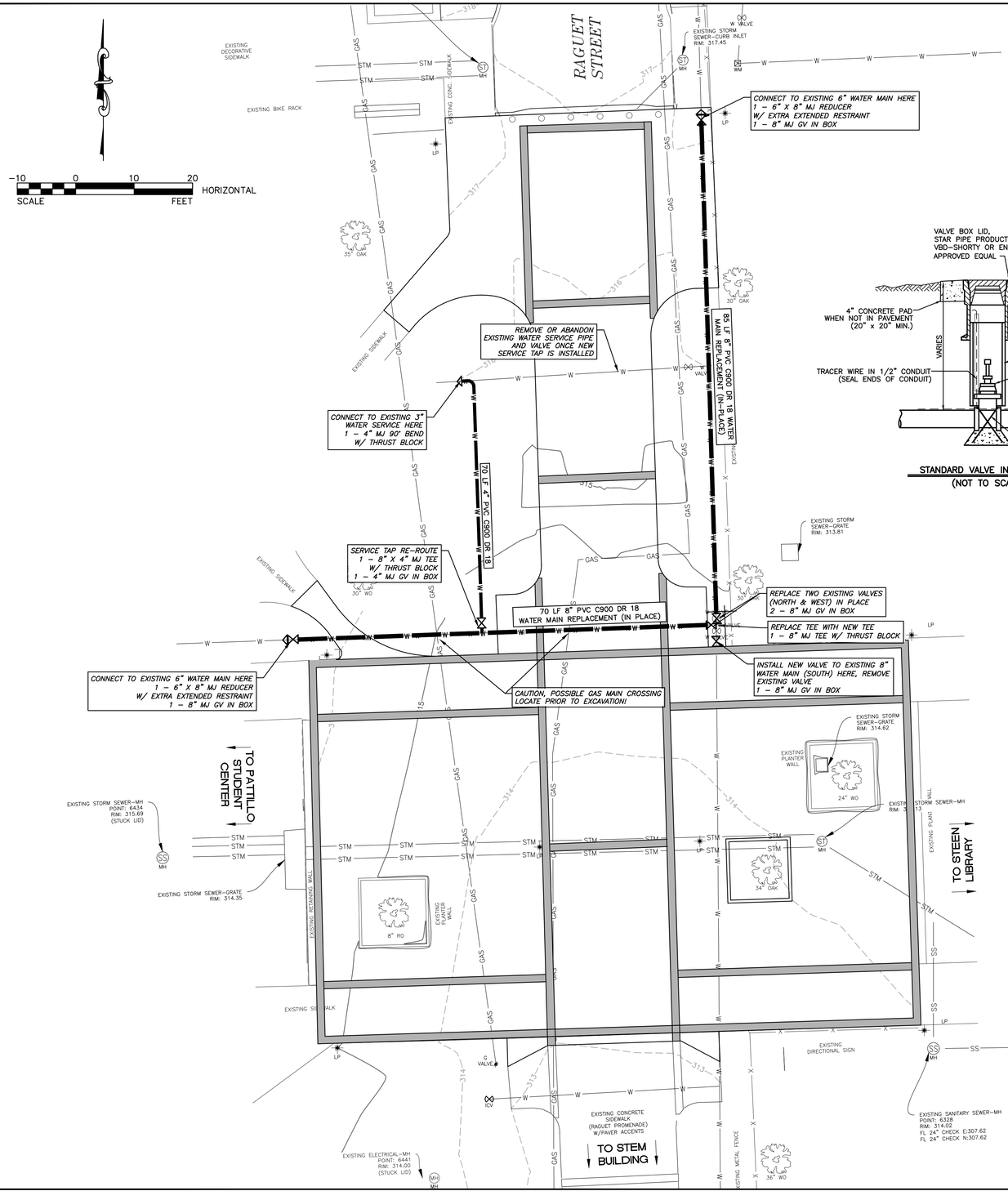

NOTES:

1. THIS SHEET IS PROVIDED TO THE CONTRACTOR FOR COORDINATION PURPOSES ONLY.
2. WATER MAIN REPLACEMENT AND IMPROVEMENTS SHOWN HEREIN WILL BE PERFORMED BY THE OWNER.
3. CONTRACTOR SHALL COORDINATE WITH OWNER TO PHASE DEMOLITION AND CONSTRUCTION ACTIVITIES TO OPTIMIZE INSTALLATION OF IMPROVEMENTS AND REPLACEMENTS SHOWN ON THIS PLAN

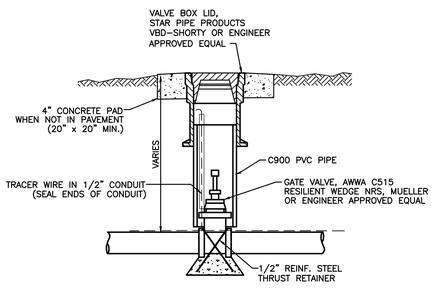

STANDARD VALVE INSTALLATION
(NOT TO SCALE)

SIZE	90° BEND		45° BEND		22-1/2° BEND		TEE	
	A	B	A	B	A	B	A	B
2-1|2"	2"	7"	6"	7"	6"	6"	7"	8"
4"	12"	8"	8"	8"	6"	8"	8"	18"
6"	18"	10"	9"	10"	8"	8"	10"	21"
8"	22"	15"	12"	13"	8"	10"	13"	16"
12"	29"	21"	6"	21"	11"	16"	18"	24"

THRUST BLOCK DETAIL
(NOT TO SCALE)

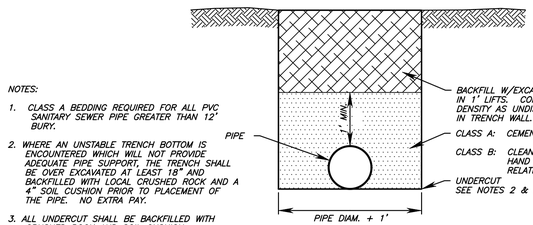

NOTES:

1. CLASS A BEDDING REQUIRED FOR ALL PVC SANITARY SEWER PIPE GREATER THAN 12' BURY.
2. WHERE AN UNSTABLE TRENCH BOTTOM IS ENCOUNTERED WHICH WILL NOT PROVIDE ADEQUATE PIPE SUPPORT, THE TRENCH SHALL BE OVER EXCAVATED AT LEAST 18" AND BACKFILLED WITH LOCAL CRUSHED ROCK AND A 4" SOIL CUSHION PRIOR TO PLACEMENT OF THE PIPE. NO EXTRA PAY.
3. ALL UNDERCUT SHALL BE BACKFILLED WITH CRUSHED ROCK AND SOIL CUSHION.
4. WHERE A TRENCH BOTTOM IS ENCOUNTERED WHICH CAN NOT BE SHAPED EVENLY TO SUPPORT THE PIPE ALONG ITS ENTIRE LENGTH (SUCH AS ROCK OR SHALE) THE TRENCH SHALL BE OVER EXCAVATED AT LEAST 6" AND BACKFILLED WITH A SOIL CUSHION PRIOR TO PLACEMENT OF THE PIPE. NO EXTRA PAY.

CLASS A & B BEDDING DETAIL
(NOT TO SCALE)

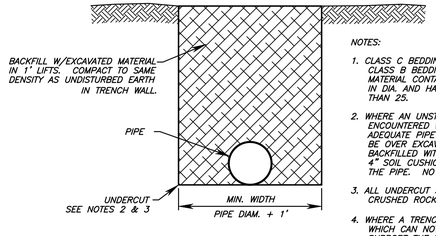

NOTES:

1. CLASS C BEDDING MAY BE USED IN LIEU OF CLASS B BEDDING IF NATURAL BACKFILL MATERIAL CONTAINS "CLODS" LESS THAN 6" IN DIA. AND HAS A PLASTICITY INDEX LESS THAN 25.
2. WHERE AN UNSTABLE TRENCH BOTTOM IS ENCOUNTERED WHICH WILL NOT PROVIDE ADEQUATE PIPE SUPPORT, THE TRENCH SHALL BE OVER EXCAVATED AT LEAST 18" AND BACKFILLED WITH LOCAL CRUSHED ROCK AND A 4" SOIL CUSHION PRIOR TO PLACEMENT OF THE PIPE. NO EXTRA PAY.
3. ALL UNDERCUT SHALL BE BACKFILLED WITH CRUSHED ROCK AND SOIL CUSHION.
4. WHERE A TRENCH BOTTOM IS ENCOUNTERED WHICH CAN NOT BE SHAPED EVENLY TO SUPPORT THE PIPE ALONG ITS ENTIRE LENGTH (SUCH AS ROCK OR SHALE) THE TRENCH SHALL BE OVER EXCAVATED AT LEAST 6" AND BACKFILLED WITH A SOIL CUSHION PRIOR TO PLACEMENT OF THE PIPE. NO EXTRA PAY.

CLASS C PIPE BEDDING DETAIL
(NOT TO SCALE)

General Notes

1. EXISTING UTILITY LOCATIONS AND/OR MATERIALS SHOWN ON THE PLANS ARE APPROXIMATE. THE CONTRACTOR IS HEREBY NOTIFIED THAT ALL EXISTING UTILITIES, WHETHER BURIED OR OVERHEAD, MAY OR MAY NOT BE SHOWN AND THAT THE CONTRACTOR IS RESPONSIBLE FOR LOCATING AND PROTECTING ALL UTILITIES WITHIN THE PROJECT AREA. THE CONTRACTOR SHALL ALSO BE RESPONSIBLE FOR REPAIRING AND/OR REPLACING ANY AND ALL UTILITIES DAMAGED BY THE CONTRACTOR'S OPERATIONS AND THE COST(S) FOR WHICH SHALL BE BORNE BY THE CONTRACTOR.
2. THE CONTRACTOR IS HEREBY NOTIFIED THAT DANGEROUS UTILITIES MAY EXIST IN THE PROJECT AREA. THESE MAY INCLUDE BUT ARE NOT LIMITED TO: OVERHEAD OR UNDERGROUND ELECTRIC LINES, TELEPHONE LINES, FIBER-OPTIC LINES, AND GAS LINES.
3. THE CONTRACTOR SHALL NOTIFY THE SFASU PPD STAFF FOR INSPECTION PRIOR TO COVERING UNDERGROUND IMPROVEMENTS, BEFORE POURING BUILDING SLABS, OR MAKING ANY UTILITY TAPS OR CURB CUTS.
4. THIS IS NOT A BOUNDARY SURVEY.
5. THE CONTRACTOR IS RESPONSIBLE FOR PROVIDING EROSION CONTROL (SILT FENCING) ON ALL DOWNHILL SLOPE AREAS OF THIS SITE.

No.	Revision/Issue	Date
1	ISSUED FOR CONSTRUCTION	10/17/19

TWO FIFTEEN CONSULTING
ENGINEERS + SURVEYORS
412 North St.
Nacogdoches, TX 75961
p: 936-569-0505
TBPE F-17461
TBPLS 10194339

Engineer Seal:

10/17/2019

STATE OF TEXAS
MICHAEL P. DELANEY
120455
LICENSED
PROFESSIONAL ENGINEER

SITE WATER MAIN AND SERVICE REPLACEMENT PLAN

SFASU RAGUET ST. PLAZA RECONSTRUCTION
STEPHEN F. AUSTIN STATE UNIVERSITY
NACOGDOCHES, TEXAS

Scale:	Issue Date:
SEE PLAN	10/17/2019
Drawn By: CMS	Checked By: MPD
File: 19047_800.dwg	Drawing No. C-800

THIS DRAWING AND OTHER RELATED DOCUMENTS, INCLUDING DOCUMENTS ON ELECTRONIC MEDIA, WERE PREPARED BY TWO FIFTEEN CONSULTING AND SHALL REMAIN THE PROPERTY OF TWO FIFTEEN CONSULTING. ALL INFORMATION SHALL BE USED ONLY FOR DESCRIBING, CONSTRUCTING, OR INSTALLING THE WORK SHOWN AT THE SITE OF THE WORK SPECIFIED HEREON. ANY OTHER USE OF THIS DRAWING, INCLUDING WITHOUT LIMITATION, ANY REPRODUCTION OR ALTERATION IS STRICTLY PROHIBITED, AND TWO FIFTEEN CONSULTING SHALL BE INDEMNIFIED FROM LIABILITY ARISING FROM THE CONSTRUCTION, USE, OR RESULT OF SUCH UNAUTHORIZED USE OR CHANGES.

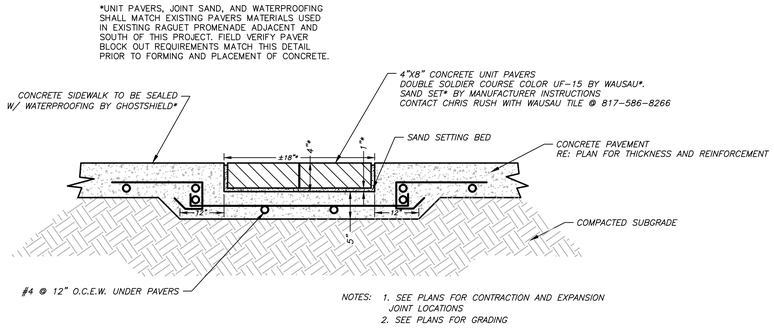

NOTES: 1. SEE PLANS FOR CONTRACTION AND EXPANSION JOINT LOCATIONS
2. SEE PLANS FOR GRADING

EM. VEHICLE CONCRETE SIDEWALK W/ UNIT PAVERS

(NOT TO SCALE)

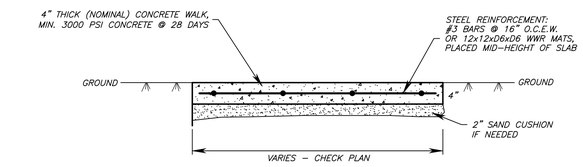

NOTES: 1. SEE PLANS FOR CONTRACTION AND EXPANSION JOINT LOCATIONS
2. SEE PLANS FOR GRADING

STANDARD CONCRETE SIDEWALK

(NOT TO SCALE)

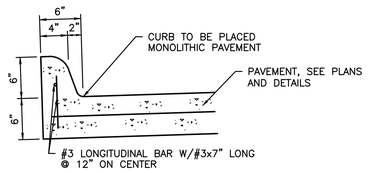

TYPICAL 6" CURB DETAIL

(NOT TO SCALE)

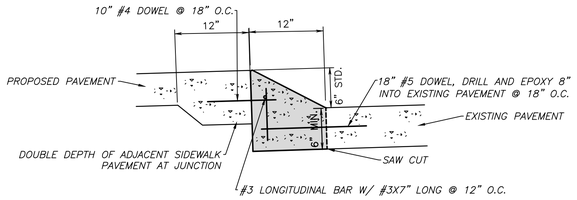

SPECIAL CONCRETE (LAYBACK) CURB DETAIL

(NOT TO SCALE)

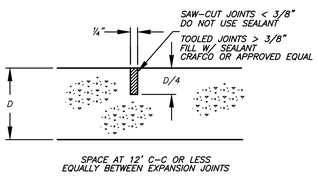

SAW-CUT CONTRACTION JOINT OR TOOLED DUMMY GROOVE

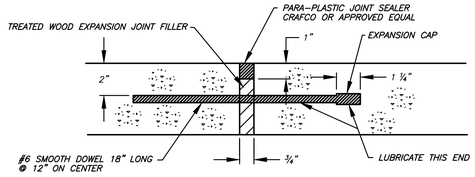

TREATED WOOD EXPANSION JOINT

(NOT TO SCALE)

General Notes

1. EXISTING UTILITY LOCATIONS AND/OR MATERIALS SHOWN ON THE PLANS ARE APPROXIMATE. THE CONTRACTOR IS HEREBY NOTIFIED THAT ALL EXISTING UTILITIES, WHETHER BURIED OR OVERHEAD, MAY OR MAY NOT BE SHOWN AND THAT THE CONTRACTOR IS RESPONSIBLE FOR LOCATING AND PROTECTING ALL UTILITIES WITHIN THE PROJECT AREA. THE CONTRACTOR SHALL ALSO BE RESPONSIBLE FOR REPAIRING AND/OR REPLACING ANY AND ALL UTILITIES DAMAGED BY THE CONTRACTOR'S OPERATIONS AND THE COST(S) FOR WHICH SHALL BE BORNE BY THE CONTRACTOR.
2. THE CONTRACTOR IS HEREBY NOTIFIED THAT DANGEROUS UTILITIES MAY EXIST IN THE PROJECT AREA. THESE MAY INCLUDE BUT ARE NOT LIMITED TO: OVERHEAD OR UNDERGROUND ELECTRIC LINES, TELEPHONE LINES, FIBER-OPTIC LINES, AND GAS LINES.
3. THE CONTRACTOR SHALL NOTIFY THE SFASU PPD STAFF FOR INSPECTION PRIOR TO COVERING UNDERGROUND IMPROVEMENTS, BEFORE POURING BUILDING SLABS, OR MAKING ANY UTILITY TAPS OR CURB CUTS.
4. THIS IS NOT A BOUNDARY SURVEY.
5. THE CONTRACTOR IS RESPONSIBLE FOR PROVIDING EROSION CONTROL (SILT FENCING) ON ALL DOWNHILL SLOPE AREAS OF THIS SITE.

No.	Revision/Issue	Date
1	ISSUED FOR CONSTRUCTION	10/17/19

TWO FIFTEEN CONSULTING
ENGINEERS + SURVEYORS
412 North St.
Nacogdoches, TX 75961
p: 936-569-0505
TBPE F-17461
TBPLS 10194339

Engineer Seal:

CIVIL DETAILS

SFASU RAGUET ST. PLAZA RECONSTRUCTION
STEPHEN F. AUSTIN STATE UNIVERSITY
NACOGDOCHES, TEXAS

Scale:	Issue Date:
SEE PLAN	10/17/2019
Drawn By:	Checked By:
HCP/CMS	MPD
File:	Drawing No.
19047_900.dwg	**C-900**

THIS DRAWING AND OTHER RELATED DOCUMENTS, INCLUDING DOCUMENTS ON ELECTRONIC MEDIA, WERE PREPARED BY TWO FIFTEEN CONSULTING AND SHALL REMAIN THE PROPERTY OF TWO FIFTEEN CONSULTING. ALL INFORMATION SHALL BE USED ONLY FOR DESCRIBING, CONSTRUCTING, OR INSTALLING THE WORK SHOWN ON THIS PROJECT. ANY UNAUTHORIZED USE OR REPRODUCTION OF THIS DRAWING, INCLUDING WITHOUT LIMITATION, ANY REPRODUCTION OR ALTERATION IS STRICTLY PROHIBITED, AND TWO FIFTEEN CONSULTING SHALL BE INDEMNIFIED FROM LIABILITY ARISING FROM THE CONSTRUCTION, USE, OR RESULT OF SUCH UNAUTHORIZED USE OR CHANGES.

GENERAL CONSTRUCTION NOTES AND REQUIREMENTS

- Contractor shall contact Texas 811 (dial 811), for utility locate request(s), at least 48 hours prior to beginning any excavation.
- Contractor shall also contact SFASU PPD for utility locate request(s), at least 48 hours prior to beginning any excavation.
- Existing utility locations shown on the plans are approximate. The Contractor is hereby notified that all existing buried utilities may or may not be shown and that the Contractor is responsible for locating and repairing any utilities damaged as a result of construction operations.
- Prior to beginning construction, Contractor shall prepare, or obtain a copy of, a Stormwater Pollution Prevention Plan (SWPPP), if necessary, in accordance with United States Environmental Protection Agency (USEPA) requirements, file a Notice of Intent (NOI), application, and fee to the Texas Commission on Environmental Quality (TCEQ). Contractor shall maintain the SWPPP notebook and weekly reports onsite at all times in compliance with USEPA and TCEQ requirements. Maintenance of erosion control measures and required reporting shall be continuous throughout construction. Preparation of the SWPPP and maintenance of the erosion control measures shall be subsidiary to the overall project cost unless provided for otherwise.
- Contractor, or owner for owner installed utilities, shall incorporate the use of a trench box or other acceptable safety system in any trench that exceeds five (5) feet in depth or where unstable soils exist. The box or safety system shall meet all OSHA requirements.
- Contractor shall use care to not damage grass, trees, shrubs, etc. outside the immediate working are. All items damaged or removed by the Contractor as a result of construction procedures shall be replaced and all costs shall be borne by the Contractor.
- Contractor shall provide traffic control, lights, barricades, signage, etc. and protect open trenches in accordance with TxDOT's Manual of Uniform Traffic Control Devices (MUTCD), latest revision.
- Operations along highways or public streets shall be performed in such a manner that all excavated materials be kept off the pavement at all times, as well as all operating equipment.
- All boring pits shall be closed the same day they are opened unless approved by Engineer. Any pit left open overnight shall be properly barricaded in accordance with TxDOT guidelines and OSHA.
- When open cut trenches cross existing pavement surfaces the contractor shall saw-cut all pavement surfaces encountered. Contractor shall only remove that portion of paved area required to install the proposed improvements. Cutting, removal, disposal, repair, and replacement shall be considered subsidiary to overall project cost unless provided for otherwise.
- Contractor shall provided access across trench(es) as and when requested by SFASU.
- Trench backfill shall be installed with mechanical tamp for full depth of the trench when working in pavement sections. Contractor, or owner for owner installed utilities, shall compact backfill in maximum 6" lifts.
- During construction all existing utilities (mains, laterals, and service connections) are to remain in service. If there is a conflict between the grades of existing and proposed improvements the Contractor shall immediately notify the Engineer of the conflict.
- Contractor shall exercise caution when working in the vicinity of landscape sprinkler systems. All sprinkler systems damaged due to construction operations shall be repaired immediately by the Contractor at no additional cost to the Owner.
- Sprinkler systems found to be in conflict with proposed improvements shall be adequately capped and repaired upon completion of construction. This repair shall be considered subsidiary to the overall project cost unless provided for otherwise. any new or additions to irrigation will be by owner.
- All construction shall meet the requirements of the current edition of the Texas Accessibility Standards.

-END OF SECTION-

SITE POTABLE WATER

- Potable water main construction shall meet the requirements of the Uniform Plumbing Code.
- During construction, the existing potable water main and service connections are to remain in service. If there is a conflict with grades of existing lines, Contractor shall provide piping or other means acceptable to the Engineer and City to align existing and proposed potable water main. Once the new potable water main is accepted by the Engineer and the Owner as operational, Contractor shall connect the existing service connections to the new potable water main with minimal loss of potable water service.
- Contractor shall plug with concrete the ends of all potable water mains to be abandoned. Concrete plugs shall be installed in all abandoned lines at each end of the line. Gate valves to be abandoned in place shall be fully closed, have their valve boxes removed, and have their operating nuts covered with concrete.
- Contractor shall saw-cut all paved surfaces encountered, unless shown otherwise on the plans. The Contractor shall only remove that portion of pavement necessary for the installation of the pipe or appurtenance. Pavement cutting, removal, disposal, and repair shall be considered subsidiary to the construction unless provided for otherwise as a unit bid item in the bid proposal.
- Contractor shall bore (without casing pipe) all improved driveways, streets, and parking areas unless otherwise noted on the plans. Wet bores for pipeline crossings, or to minimize impacts to utility poles, trees, fences, or other obstructions shall be considered subsidiary to pipe installation unless shown on the plans and included as a unit bid item in the bid proposal.
- Inadvertent discharge of super-chlorinated water to the environment is strictly prohibited. The Contractor shall take all precautions available to ensure that this does not occur. Inadvertent discharges, whether accidental or intentional, that cause damage to the environment shall be the sole responsibility of the Contractor.
- Fittings required to make vertical bends not shown on the plans shall be installed by the contractor and be considered subsidiary to pipe installation unless written approval is granted by the Engineer.
- Fire hydrants shall be installed at the locations shown on the plans. The location may be adjusted to fit actual field conditions to position the valve or hydrant at the most accessible, and least objectionable, point available. The Contractor shall obtain Engineer's approval of final hydrant location(s) prior to installation.
- All valve boxes shall be installed flush with finished grade, pavement, etc., centered on the valve nut, and clear of any and all debris that would restrict valve operation at the time of final acceptance.
- Where non-metallic pipe is used, it shall be marked by laying a tracer wire, direct bury cable, 14-gauge THHN stranded, directly over and running parallel to the pipe. Tracer wire shall be terminated in valve boxes and at hydrants or other approved above ground appurtenances.
- PVC fittings shall be of the same class as the pipe in which they are to be installed.
- All bends, tees, wyes, and couplings for 2" and larger pipe shall be Ductile Iron Mechanical Joint Fittings Class 350.

-END OF SECTION-

SITE RESTORATION AND CLEANUP

General

- As soon as the pipe is laid and backfilled or structures built, clean the construction site and any adjoining areas used by the Contractor in construction and make any restorations necessary to leave the site in a condition equal to or better than prior to construction.
- As a matter of record, the Contractor shall photograph improved or planted areas before and after working across them.

Restoration

- The Contractor shall restore and/or replace any paving, curbing, sidewalks, culverts, gutters, shrubbery, plants, fences, sod or other disturbed surfaces or structures. The size, thickness, strength, texture or condition of restored items shall equal to that which existed before the work began.
- All terraces, levees and water courses shall be restored to their former condition so that they shall function as originally intended.
- Private roads used by the Contractor shall be restored to former condition.

Cleanup

- The cleaning up shall be done by a special labor crew organized by the Contractor at the time he starts backfill operations and such work shall be diligently prosecuted until the entire construction site has been covered.
- Any rock, including loose rock having a dimension three (3) inches or more, encountered by the grading, trenching or boring operations, not backfilled according to the specifications, shall be removed from the construction site and disposed of at locations and in a manner that is satisfactory to the Owner.
- Unless directed otherwise by the Owner, all materials used for providing temporary roadways for construction equipment shall be removed and disposed of.
- All debris, pavement and excess earth from excavations shall be removed and disposed of by the Contractor.
- Seeding w/fertilizer, hydo-mulch seeding w/fertilizer, or sodding will be necessary in all areas of the site that are disturbed by construction activities. The seeding or sodding shall be performed according to specifications, drawing notes, or at owners direction.
- To prevent erosion of soil disturbed by construction, the Contractor shall construct terraces or shall place over the construction site and trench backfill suitable control devices composed of sacks filled with earth or sand, silt fences, silt dams or hay bales.
- The Contractor should not attempt to perform cleanup operations during adverse weather or wet ground conditions.
- At no time during the progress of the work shall the completed cleanup operation be a greater distance behind the completed pipe trench than is deemed advisable by the Engineer.
- Before the final acceptance of the project, the entire project site shall be cleared of all surplus and waste materials from the work and otherwise restored as required above. Final finished surfaces shall be smooth and suitable for normal methods of mowing and maintenance appropriate for such site.

-END OF SECTION-

CONCRETE PAVEMENT

- Mix designs shall be approved by the Engineer, based on documented 28-day compressive strength test results. Concrete pavement shall achieve 3500 psi unless otherwise shown in the plans. The use of ready mixed concrete will be permitted for all concrete provided that the plant, truck mixers, agitators and mixing equipment conform to the requirements of the Texas Department of Transportation.
- The owner, at his expense, shall provide materials testing by and independent laboratory to verify compressive strength and slab thickness. However, the contractor shall be responsible for all costs of the re-testing of all failed areas.

Joint Materials

- Expansion joint fillers shall be asphalt impregnated joint board or pre-formed fiber material conforming to the requirements of ASTM D-994 or D-1751 of required size and 3/4" uniform thickness. The filler for each joint shall be furnished in a single piece for the full depth and width and shall be punched to admit dowels where called for in the plans. When used in transverse joints, it shall conform approximately to the shape of the finished pavement as shown on the plans.
- Ready mixed cold applied joint and crack sealer shall consist of a homogeneous blend of asphalt, rubber, inert filler and a suitable solvent or solvents. The material shall be a resilient, adhesive compound capable of effectively sealing properly cleaned joints in concrete pavement against the infiltration of moisture throughout repeated cycles of contraction and expansion and which will not be picked up by vehicle tires, particularly at summer temperatures. Joint sealants and fillers shall meet all requirements of TxDOT Standard Specifications for Construction of Highways, Streets and Bridges, latest edition, Item 433, "Joint Sealants and Fillers".
- The Material when tested in accordance with TxDOT Method Tex 525-C shall meet the following requirements:

  Penetration:
  At 77oF: (As received) 150 grams, 5 seconds ..... not less than 2.75 cm.
  (After Evaporation of solvent) 200 grams, 60 seconds ..... not more than 2.20 cm.

  At 32oF:(After evaporation of solvent) 200 grams, 60 seconds....not less than 2.20 cm.
  Flow:
  Not more than 0.5 cm.
  Bond:
  There shall be no cracking of the material or failure in bond between the material and the mortar test blocks during or at the end of five cycles.

Steel

- Dowels
  Approved load transmission devices for expansion and contraction joints shall consist of smooth, rust-free, steel dowel bars of the size and type indicated on plans and shall be open hearth, basic oxygen or electric furnace steel conforming to the properties specified for Grade 60 in ASTM Designation: A 615. The free end of dowel bars shall be smooth and free of shearing burrs.

  ** When required by plans, one end of each dowel bar shall be encased in an approved cap having an inside diameter of 1/16 inch greater than the diameter of the dowel bar. The cap shall be of such strength, durability and design as to provide free movement of the dowel bar and shall be approved by the Engineer prior to use. One end of the cap shall be filled with a soft felt plug or shall be void in order to permit free movement of the dowel bar for a distance equivalent to 150 percent of the width of the joint used. The dowel caps and dowel bars shall be held securely in place and accurately aligned parallel to the subgrade and the centerline of the pavement by means of a dowel assembly, which will remain in the pavement to ensure that the dowels are not displaced during construction. Mechanical methods of implanting dowel bars in the plastic concrete may be used if approved by the Engineer. Smooth dowel bars shall be coated with heavy grease on one end.
- Reinforcing Steel
  Unless otherwise shown on the plans, or herein, all bar reinforcement shall be de-formed, conforming to ASTM A-615, grade 60. Bends shall be cold-bends only, without any signs of fatigue or cracking. Any bars that are to be bent and re-straightened during construction shall conform to ASTM A-615, grade 40. Lap splices shall conform to CRSI 5-13 or equal. Welded wire fabric reinforcement, where required, shall conform to ASTM A-185 or ASTM A-497. All rust, mud and debris shall be cleaned from steel prior to concrete placement.
- Curing
  The membrane-curing compound shall comply with the requirements of TxDOT Standard Specification Item 526 "Membrane Curing", 1993 edition.

EQUIPMENT

- All equipment necessary for the construction of this item shall be on the project and shall be approved by the Engineer as to condition before the Contractor will be permitted to begin construction operations on which the equipment is to be used. When approved by the Engineer in writing, a commercial or independently operated batching plant for measuring materials outside the limits of the project may be used.
- Mixer
  The mixer furnished may be a paving mixer (operated at the site of the construction or centrally located), a stationary mixer (central mixer) or paving mixer (truck mounted) that will produce adequately mixed concrete meeting the specified requirements.

  The size of the paving mixer shall not be less than that of a 27-E paver, as established by the Mixer Manufacturer's Bureau of the Associated General Contractors. Each truck mounted paving mixer shall be approved by the Engineer prior to use on the project.

  Each mixer shall be equipped with a water measuring device so constructed that it will measure the water within one (1) percent of the total amount required for each batch. Unless the water is to be weighed, the water measuring equipment shall include an auxiliary tank with a capacity greater than that of the measuring tank, and from which the measuring tank will be filled by gravity flow. The measuring tank shall be open to the atmosphere and shall be so placed and constructed that the water for a batch can be discharged into a calibrated tank or weighing device for checking the accuracy of water measurement without seriously delaying the paving operations. The Contractor shall have a calibrated tank or weighing device available at all times at a location satisfactory to the Engineer.
- Hauling Equipment
  Batch hauling equipment for the transportation of measured materials from the batching plant to the mixer shall be equipped with tight covers and shall be used when directed by the Engineer to prevent excessive evaporation of moisture or any loss of material.

  If a central mixer is used, concrete may be transported to the point of delivery in truck agitators or non-agitating trucks. If, in the opinion of the Engineer, any appreciable segregation or accumulation of excess water and/or mortar occurs on the surface of the concrete, this may be cause for rejection and this method of transporting the concrete to the point of delivery shall be suspended as directed by the Engineer.
- Subgrade or Subbase Planer and Templates
  Unless a stabilized subbase is provided, an approved subbase planer shall be provided, mounted on visible rollers, riding on the forms and having adjustable cutting blades which shall trim the subgrade to the exact section shown on the plans. The planer frame shall be heavy enough to remain on the forms at all times and shall be of such strength and rigidity that, under a test made by changing the support from the wheels to the center, it shall not develop a deflection of more than 1/8 inch. Tractive power equipment used to pull the planer shall not be such as to produce ruts or indentations in the subgrade.

  When the slipform method of paving is to be used, the subgrade planer will be operated on a prepared track grade or controlled by an electronic sensor system operated from a "string line" that establishes the horizontal alignment and the elevation of the subbase.

  A template for checking the contour of the subbase shall be provided and operated by the Contractor. The template shall rest upon the side forms and shall be of such strength and rigidity that, under a test made by changing the support to the center, it shall not show a deflection of more than 1/8 inch. It shall be provided with accurately adjustable rods projecting downward to the subgrade at one (1) foot intervals, and these rods shall be adjusted to the required cross section of the bottom of the slab when the template is resting upon the side forms. Where stabilized subbase is provided, use of a scratch template will be required.
- Forms
  Side forms shall be of metal of approved cross-section. The preferred depth of the form shall be equal to the required edge thickness of the pavement. Forms with depth greater or less than the required edge thickness of the pavement will be permitted provided the difference between the form depth and the edge thickness is not greater than one (1) inch and further provided that forms of a depth less than the pavement edge are brought to the required edge thickness by securely attaching metal strips of approved section to the bottom of the form. Longitudinal hardwood strips not greater than one (1) inch in thickness may be used in lieu of metal strips.

  The length of form sections shall not be less than 10 feet and each section shall provide for staking in position with not less than three pins. Flexible or curved forms of wood or metal of proper radius shall be used for curves of 200-foot radius or less. Forms shall be of ample strength and shall be provided with adequate devices for secure setting so that when in place they will withstand, without visible springing or settlement, the impact and vibrating of the spreading and finishing machinery. In no case shall the base be less than 8 inches for a form 8 inches or more in height. The forms shall be free from warps, bends, or kinks, and shall be sufficiently true to provide a reasonably straight edge on the concrete and the top of each form section, and when tested with a straight edge shall conform to the requirements specified for the surface of the completed pavement. Sufficient forms shall be provided for satisfactory prosecution of the work.

  Outside curb forms shall be of wood or metal of section satisfactory to the Engineer, straight, free of warp, and shall be of a depth at least equal to the depth of the curb. They shall be mounted on the paving forms and securely attached thereto and maintained in true position during the placing of the concrete.
- Concrete Spreader
  Use of a concrete spreader shall be required and it shall be a self-propelled machine having sufficient power and traction to spread and strike off concrete without slippage on the forms. It shall be equipped with a power driven device for spreading the concrete uniformly between the forms. The spreading device may be either a reciprocating blade, a screw conveyor or a belt conveyor. The spreader shall be capable of striking off the surface of the concrete between the forms in the longitudinal direction of the slab at any required elevation.
- Slipform Paver
  This paver shall be equipped with a longitudinal transangular finishing adjustable to crown and grade. The float shall extend across the pavement practically to the side forms and/or the edge of slab. A "string line" shall be used to provide grade control for the paver, unless otherwise shown on the plans.
- Mechanical Vibratory Equipment
  All concrete placed for pavement shall be consolidated by approved mechanical vibrators operated ahead of the transverse finishing machine and designed to vibrate the concrete internally and/or from the surface. Vibratory members shall extend across the pavement, practically to, but shall not come in contact with, the side forms. Mechanically operated vibrators shall be mounted in such manner as to not interfere with the transverse or longitudinal joints.

  The pavement vibrators shall not be used to level or spread the concrete but shall be used only for purposes of consolidation. The vibrators shall not be operated for more than fifteen (15) seconds while the machine upon which they are installed is standing still.

  Approved hand manipulated mechanical vibrators shall be furnished in the number required for provision of proper consolidation of the concrete along forms, at joints and in areas not covered by mechanically controlled vibrators. These vibrators shall be sufficiently rigid to insure control of the operating position of the vibrating head.
- Finishing Equipment
  The transverse finishing machine shall be provided with two (2) screeds accurately adjusted to the crown of the pavement, shall be power driven and mounted in a substantial frame equipped to ride on the forms, and shall be so designed and operated as to strike off and consolidate the concrete.

  Where hand finishing is permitted under this specification, the Contractor shall provide a strike template and tamping template both of four (4) by ten (10) inch lumber or equivalent metal section and at least two (2) feet longer than the width of the pavement. Both templates shall conform to the crown section of the pavement, and the tamp, if of wood, shall have a steel face not less than 3/8 inch in thickness. The contractor shall also provide a longitudinal float of approved design and not less than fourteen (14) feet in length. The Contractor shall furnish, operate and maintain at least two (2) standard ten (10) foot steel straightedges.

  The Contractor shall furnish a sufficient number of bridges equipped to ride on the forms and span the pavement for finishing operations and for the installation and finishing of joints. All necessary finishing and edging tools shall be furnished as may be required to complete the pavement in accordance with the plans.

SUBGRADE AND FORMS

- Preparation of Subgrade
  Where stabilized subbase is not provided the subgrade shall be excavated as required, all unstable or otherwise objectionable material removed, and all holes, ruts and depressions filled with approved material. Rolling and sprinkling shall be performed when and to the extent directed, and the road bed shall be completed to or above the plane of the typical sections shown on the plans and the lines and grades established by the Engineer. Material excavated in the preparation of the subgrade shall be utilized in the construction of adjacent shoulders and slopes, and any additional material required for the completion of the sections shall be secured from sources indicated on the plans or designated by the Engineer. Drainage of the roadbed shall be maintained at all times.

  The subgrade shall be maintained in a smooth, compacted condition in conformity with the required section and established grade until the pavement is placed and shall be kept thoroughly wetted down sufficiently in advance of placing any pavement to insure its being in a firm and moist condition for at least two (2) inches below the prepared surface. Sufficient subgrade shall always be prepared in advance to insure satisfactory prosecution of the work. No equipment or hauling shall be permitted on the prepared subgrade, except by special permission of the Engineer, which will be granted only in exceptional cases and only where suitable protection in the form of two ply timber mats or other approved materials is provided.
- Placing and Removing Forms
  The subgrade under the forms shall be firm and cut true to grade so that each form section when placed will be firmly in contact for its whole length and base width, and exactly at the established grade. Any subgrade under the forms below established grade shall be corrected, using suitable material, placed, sprinkled and rolled as directed. Forms shall be staked with at least three pins of each 10-foot section. A pin shall be placed at each side of every joint. Form sections shall be tightly joined and keyed to prevent relative displacement. Forms shall be cleaned and oiled each time they are used. Conformity of the grade and alignment of forms shall be checked immediately prior to placing concrete, and all necessary corrections made by the Contractor. Where any form has been disturbed or any subgrade becomes unstable, the form shall be reset and rechecked. In exceptional cases, the Engineer may require suitable stakes driven to the grade of the bottom of the forms to afford additional support. Sufficient stability of forms to support the equipment operated thereon and to withstand its vibration without springing or settlement shall be required. If forms settle and/or deflect over 1/8 inch under finishing operations, paving operations shall be stopped and the forms shall be reset to line and grade.

  Forms shall remain in place for not less than eight (8) hours after the concrete has been placed. They shall be carefully removed in such a manner that little or no damage will be done to the edge of the pavement. Any damage resulting from this operation shall be immediately repaired. After the forms have been removed, the ends of all joints shall be cleaned, and any honeycombed areas pointed up with approved mortar. Immediately after pointing is complete, the form trench, if used, shall be filled with earth from the shoulders in such a manner as to shed water from rainfall or curing away from the edge of the pavement. Upon completion of the required curing, the subgrade or shoulders adjacent to the pavement shall be placed in condition to maintain drainage.

CONCRETE PAVEMENT CONTINUED

CONCRETE MIXING AND PLACING

- The concrete shall be mixed in a mixer conforming to the requirements. Ready Mix concrete may be used for mixing concrete for pavement.
- Mixing
  The aggregates, mineral filler if required, cement and water shall be measured separately, introduced into the mixer and mixed for a period of not less than 50 seconds nor more than 90 seconds, measured from the time the last aggregate enters the drum to the time discharge of the concrete begins. The required water shall be introduced into the mixing drum during the first 15 seconds of mixing. The entire contents of the drum shall be discharged before any materials of the succeeding batch are introduced.

  If a central mixer is used, the concrete shall be discharged into the specified hauling equipment and delivered to the road site. If truck agitators are used, the concrete shall be continuously agitated at not less than one nor more than six rpm as directed by the Engineer.
- Placing
  Unless otherwise shown on the plans the concrete may be placed by using forms or by use of a slipform paver. Any concrete not placed as herein prescribed within thirty (30) minutes after mixing shall be rejected and disposed of as directed except as provided otherwise herein. Except by specific written authorization of the Engineer, concrete shall not be placed when the temperature is below 50oF and falling but may be placed when the temperature is above 45oF and rising, the temperature being taken in the shade and away from artificial heat.

  Concrete shall be placed only on approved subgrade or subbase and unless otherwise indicated on the plans, the full width of the pavement shall be constructed monolithically. The concrete shall be deposited on subgrade or subbase in such manner as to require as little rehandling as possible. Where hand spreading is necessary, concrete shall be distributed to the required depth by use of shovels. The use of rakes will not be permitted. Workers will not be permitted to walk in the concrete with any earth or foreign material on their boots or shoes. The placing of concrete shall be rapid and continuous.

  Concrete shall be distributed to such depth that, when consolidated and finished, the slab thickness required by the plans will be obtained at all points and the surface shall not, at any point, be below the established grade. Special care shall be exercised in placing and spreading concrete against forms and at all joints to prevent the forming of honeycombs and voids.

  Concrete for the monolithic curbs shall be the same as for the pavement and, if carried back from the paving mixer, shall be placed within 20 minutes after being mixed. It may be placed while the pavement concrete is still plastic. When sawed joints are used, curbs shall be doweled as shown on the plans and poured after sawing. Curbs doweled on and placed separately may be placed with an extrusion machine.
- Reinforcing Steel and Joint Assemblies
  All reinforcing steel, including steel wire fabric reinforcement, tie bars, dowel bars and load transmission devices used in accordance with plan provisions shall be accurately placed and secured in position in accordance with details shown on the plans. Reinforcing bars shall be securely wired together at alternate intersections, following a pattern approved by the Engineer, and at all splices, and shall be securely wired to each dowel intersected. When wire fabric is used, it replaces only the longitudinal and transverse bars and shall be securely wired together at all splices and to each dowel intersected. The bars shall be installed in the required position by the method and device shown on plans or by approved method permitted. If this method of placement proves inadequate, the work shall be completed using conventional methods.
- Construction Joints
  Intentional stoppage of the placing of the concrete shall be at either an expansion joint or at a weakened plane joint, if load transmission devices are specified.

JOINTS

- General
  All transverse and longitudinal joints when required in the pavement shall be of the type or alternate type shown on the plans and shall be constructed at required location, on required alignment, in required relationship to tie bars and joint assemblies, and in accordance with details shown on the plans. Such stakes, braces, brackets or other devices shall be used as necessary to keep the entire joint assembly in true vertical and horizontal position.

  Careful workmanship shall be exercised in the construction of all joints to insure that the concrete sections are completely separated by an open joint or by the joint materials and to insure that the joints will be true to the outline indicated.
- Expansion Joints
  Transverse expansion joints shall be formed perpendicular to the centerline and surface of the pavement and shall be constructed in accordance with the sequence of operations shown on plans. After the transverse finishing machine and before the longitudinal finishing machine have passed over the joint, the Contractor shall test the joint filler for correctness of position and make any required adjustment in position of the filler and shall install the joint seal space form in accordance with the plans. After removal of the joint seal form as required by the plans, the joint seal space above the joint filler shall be thoroughly sandblasted or machine routed to remove all projecting concrete, laitance, dirt or foreign matter. The concrete faces of the joint seal space shall be left true to line and section throughout the entire length of the joint. The joint faces shall be clean and dry at the time the joint sealing filler is placed. The pavement adjacent to the joint shall be left free of joint sealing material. The joint seal space shall be exactly above and not narrower than the joint filler with no concrete overhangings.
- Weakened Plane Joints
  Weakened plane joints shall consist of transverse contraction joints and longitudinal joints and shall be formed or sawed as specified on the plans. When the joints are sawed, the saw shall be power driven, shall be manufactured especially for the purpose of sawing concrete, and shall be capable of performing the work. Saw blades shall be designed to make a clean smooth cut having a width and depth of cut as detailed on the plans. Tracks adequately anchored, chalk, string line or other approved methods shall be used to provide true alignment condition an the Contractor shall keep a standby power saw on the project at all times when concrete operations are under way. If membrane curing is used, the portion of the seal, which has been disturbed by sawing operations, shall be restored by the Contractor by spraying the areas with additional curing seal.
- Contraction Joints
  Transverse contraction joints shall be formed or sawed joints perpendicular to the centerline and surface of the pavement and shall be constructed by the method, and in the sequence of operations, as shown on the plans. Where sawed joints are used, contraction joints shall be sawed as soon as sawing can be accomplished without damage to the pavement and before 48 hours after the concrete has been placed, the exact time to be approved by the Engineer. All joints shall be completed before placing concrete in succeeding lanes and before permitting traffic to use the pavement.
- Longitudinal Joints
  Longitudinal joints shall be of the type or alternate types shown on the plans and shall be constructed of specified materials in accordance with provision of the plans. Longitudinal joints shall be constructed accurately to required lines, shall be perpendicular to the pavement surface at the joint, and the pavement surface over and adjacent to the joint shall be finished as specified.

  Longitudinal joints shall be sawed as soon as sawing can be accomplished without damage to he pavement. Sawing shall not cause damage to the pavement and the groove shall be cut with a minimum of spalling. No traffic (including construction traffic) shall be permitted on the pavement until the longitudinal joint is cut.
- Joint Sealer Material
  After the joints in the hardened concrete have been thoroughly cleaned to the satisfaction of the Engineer, the material shall be installed into each joint by means of a powered, concrete joint sealing machine capable of continuously feeding the compound under pressure into the joint in such a way as to fill it solidly. The extruding nozzle tip of the sealing machine shall be of such design as to fill the joint opening uniformly from the bottom to the top in a neat and workmanlike manner. The joints shall be completely filled.
- Joint Filler Boards
  Boards shall be anchored as indicated by the plans.
- Curbs
  The curb shall be constructed in lengths equal to the adjoining pavement slab lengths and expansion joints shall be provided in the curb opposite each transverse expansion joint in the pavement. Expansion joint material shall be of the same thickness, type and quality as specified for the pavement and shall be of the section as shown for the curb. All expansion joints shall be carried through the curb.

  When sawed joints are provided for the pavement, the curb shall be sawed as all transverse joints are being sawed. To provide bond for the curb, deformed dowel bars shall be placed as indicated on the plans while the pavement concrete is still plastic. The concrete for the monolithic curb shall be placed within forty-five (45) minutes after placement of the pavement slab.

  Weakened Plane joints can be formed in monolithic curbs at a spacing to coincide with the joints in the concrete pavement. When the concrete is sufficiently set, the joint on the face of curb shall be grooved with an approved type of grooving tool.

  A finish coat of mortar shall be applied on the exposed surfaces of the monolithic curbs. The mortar shall be composed on one part of Portland cement and two parts of fine aggregate. A mortar coat will not be required for extruded curbs.

  The curb face, lower radius and top of curb shall be plastered with sand cement mortar. The mortar shall be applied with a template or "mule" made to conform to the curb dimensions shown on the plans. All exposed surfaces of the curb shall be finished with a steel trowel and brushed to a smooth and uniform surface.

SPREADING AND FINISHING

- Machine Finishing
  All concrete pavement shall be finished mechanically with approved power-driven machines, except as herein provided. Hand finishing will be permitted on the transition from a crowned section to a super-elevation section without crown on curves, and on straight line super-elevation sections less than 300 feet in length. Hand finishing will also be permitted on that portion of a widened pavement outside the normal pavement width, on sections where the pavement width is not uniform, or required monolithic widths are greater than that of available finishing machines.

  Machine finishing of pavement shall include the use of power driven spreaders, power driven vibrators, power driven transverse strike-off, and screed, or such alternate equipment as may be substituted and approved.

  All concrete pavement shall be consolidated by a mechanical vibrator. As soon as the concrete has been spread between the forms, the approved mechanical vibrator shall be operated to consolidate the concrete and remove all voids. Hand manipulated vibrators shall be used for areas not covered by the mechanical vibratory unit.

  The transverse finishing machine shall first be operated to compact and finish the pavement to the required section and grade, without surface voids. The machine shall be operated over each area as many times and at such intervals as directed. At least two trips will be required and the last trip over a given area shall be a continuous run of not less than 40 feet. After completion of finishing with the transverse finishing machine a transverse drag float may be used. The consistency of the concrete as placed should allow the completion of all finishing operations without the addition of water to the surface. When field conditions are such that additional moisture is needed for the final concrete surface finishing operation, the required water shall be applied to the surface by fog spray only and shall be held to a minimum.

  After finishing is complete and the concrete still workable, the surface shall be tested for trueness with an approved 10 foot steel straightedge. The straightedge shall be operated from the side of the pavement, placed parallel to the pavement centerline and passed across the slab to reveal any high spots or depressions. The straightedge shall be advanced along the pavement in successive stages of not more than one-half its length. Practically perfect contact of the straightedge with the surface will be required, and the pavement shall be leveled to this condition, in order to insure conformity with the surface test required below, after the pavement has fully hardened. Any correction of the surface required shall be accomplished by adding concrete if required and by operating the longitudinal float over the area. The surface test with the straightedge shall then be repeated.

  For one-lane pavement and uniform widening, the equipment used for machine finishing of concrete pavement shall be as directed by the Engineer but shall not exceed the requirements of these specifications.

  After completion of the straightedge operation, as soon as construction operations permit, texture shall be applied with 1/8 inch wide metal tines with clear spacing between the tines being not less than 1/4 inch nor more than 1/2 inch. If approved by the Engineer, other equipment and methods may be used, provided that a surface texture meeting the specified requirements is obtained. The texture shall be applied transversely. It is the intent that the average texture depth resulting from the number of tests directed by the Engineer be not less than 0.060 inch with a minimum texture depth of 0.050 inch for any one test when tested in accordance with Test Method Tex 436_A. Should the texture depth fall below that intended, the finishing procedures shall be revised to produce the desired texture.
- Hand Finishing
  Hand finishing shall be restricted to only those conditions provided for above and upon specific authorization by the Engineer. When hand finishing is permitted, the concrete shall be struck off with an approved strike-off screed to such elevation that when consolidated and finished the surface of the pavement shall conform to the required section and grade. The strike template shall be moved forward with a combined transverse and longitudinal motion in the direction the work is progressing, maintaining the template in contact with the forms, and maintaining a slight excess of material in front of the cutting edge. The concrete shall then be tamped with an approved tamping template to compact the concrete thoroughly and eliminate surface voids and the surface screeded to required section.

  After completion of a strike-off, consolidation and transverse screeding, a hand operated longitudinal float shall be operated t test and level the surface to the required grade.

  Workers shall operate the float from approved bridges riding on the forms and spanning the pavement. The longitudinal float shall be held in contact with the surface and parallel to the centerline and operated with short longitudinal strokes while being passed from one side of the pavement to the other. If contact with the pavement is not made at all points, additional concrete shall be placed, if required, and screeded, and the float shall be used to produce a satisfactory surface. Care shall be exercised to keep the ends of the float from digging into the surface of the pavement. After a section has been smoothed so that the float maintains contact with the surface at all points in being passed from one side to the other, the bridges may be moved forward half the length of the float and the operations repeated. Other operations and surface tests shall be as required for machine finishing.
- Surface Test
  After the concrete has been placed 12 hours or more, the Engineer will test the surface of the pavement with a 10-foot straightedge placed parallel to the centerline. Unless specified otherwise, the surface shall not vary from the straightedge by more than 1/16 inch per foot from the nearest point of contact, and in no case shall the maximum ordinate from a 10 foot straightedge to the pavement be greater than 1/8 inch. Any high spots causing a departure from the straightedge in excess of that specified shall be ground down by the Contractor to meet the surface test requirements. Where the texture of the pavement is removed by extensive grinding, the texture shall be restored by grooving the concrete to meet the surface-finishing specifications.

CURING

- General
  All concrete pavement shall be cured by protecting it against loss of moisture for a period of not less than 72 hours from the beginning of curing operations. Immediately after finishing operations have been completed, the entire surface of the newly laid concrete shall be covered and cured in accordance with the requirements specified.
- Membrane Curing
  Immediately after the finishing of the pavement has been completed and after the free surface moisture has disappeared, the pavement shall be sprayed uniformly with a curing compound. Should the film of compound be damaged from any cause before the expiration of 72 hours after original application, the damaged portions shall be repaired immediately with additional compound. Unless otherwise specified on the plans, membrane curing shall be used when the concrete (except that concrete to be used as a base) is placed with a slipform paver.

PROTECTION OF PAVEMENT AND OPENING TO TRAFFIC

- Protection of Pavement
  The Contractor shall erect and maintain the barricades required by plans and such other standard and approved devices as will exclude public traffic and traffic of his employees and agents from the newly placed pavement for the periods of time hereinafter prescribed. Portions of the roadway, or crossings of the roadbed required to be maintained open for use by traffic, shall not be obstructed by the above-required barricades. Crossings of the pavement required by the plans, or by construction sequence, during the time prior to opening to traffic as herein specified, shall be provided with an adequate and substantial bridge, approved by the Engineer.
- Opening Pavement to Traffic
  The pavement shall be closed to all traffic, including vehicles of the Contractor, until the concrete is at least seven (7) days old or has reached 75% of its 28-day design strength, whichever is shorter. At the end of this waiting period, and as long thereafter as ordered by the Engineer, and is so desired by the Contractor, the pavement may be opened for use by vehicles of the Contractor provided the gross weight (vehicle plus load) of such vehicles does not exceed 14,000 pounds. Such opening, however, shall in no manner relieve the Contractor from his responsibility of his warranty of the work. On those sections of the pavement thus opened to traffic, all joints shall first be sealed, the pavement cleaned and earth placed against the pavement edges before permitting vehicles thereon.

  After the concrete in any section of pavement is 14 days old, or for a period of time as ordered by the Engineer, such section or pavement may be opened to all traffic as required by plans or when so directed by the Engineer. On those sections of the pavement thus opened to traffic, all joints shall first be sealed, the pavement cleaned, earth placed against the pavement edges and all other work performed as required for the safety of traffic.

-END OF SECTION-

General Notes

1. EXISTING UTILITY LOCATIONS AND/OR MATERIALS SHOWN ON THE PLANS ARE APPROXIMATE. THE CONTRACTOR IS HEREBY NOTIFIED THAT ALL EXISTING UTILITIES, WHETHER BURIED OR OVERHEAD, MAY OR MAY NOT BE SHOWN AND THAT THE CONTRACTOR IS RESPONSIBLE FOR LOCATING AND PROTECTING ALL UTILITIES WITHIN THE PROJECT AREA. THE CONTRACTOR SHALL ALSO BE RESPONSIBLE FOR REPAIRING AND/OR REPLACING ANY AND ALL UTILITIES DAMAGED BY THE CONTRACTOR'S OPERATIONS AND THE COST(S) FOR WHICH SHALL BE BORNE BY THE CONTRACTOR.
2. THE CONTRACTOR IS HEREBY NOTIFIED THAT DANGEROUS UTILITIES MAY EXIST IN THE PROJECT AREA. THESE MAY INCLUDE BUT ARE NOT LIMITED TO: OVERHEAD OR UNDERGROUND ELECTRIC LINES, TELEPHONE LINES, FIBER-OPTIC LINES, AND GAS LINES.
3. THE CONTRACTOR SHALL NOTIFY THE SFASU PPD STAFF FOR INSPECTION PRIOR TO COVERING UNDERGROUND IMPROVEMENTS, BEFORE POURING BUILDING SLABS, OR MAKING ANY UTILITY TAPS OR CURB CUTS.
4. THIS IS NOT A BOUNDARY SURVEY.
5. THE CONTRACTOR IS RESPONSIBLE FOR PROVIDING EROSION CONTROL (SILT FENCING) ON ALL DOWNHILL SLOPE AREAS OF THIS SITE.

No.	Revision/Issue	Date
1	ISSUED FOR CONSTRUCTION	10/17/19

TWO FIFTEEN CONSULTING
ENGINEERS + SURVEYORS

412 North St.
Nacogdoches, TX 75961
p: 936-569-0505

TBPE F-17461
TBPLS 10194339

Engineer Seal:

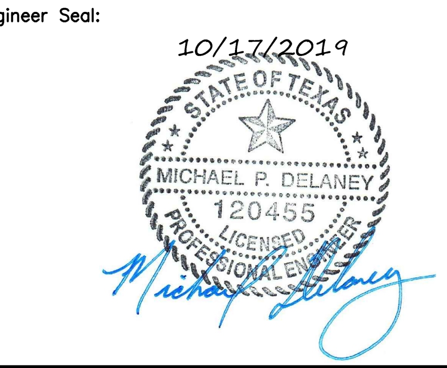

CIVIL NOTE AND SPECIFICATIONS

SFASU RAGUET ST. PLAZA RECONSTRUCTION STEPHEN F. AUSTIN STATE UNIVERSITY NACOGDOCHES, TEXAS

Scale: SEE PLAN	Issue Date: 10/17/2019
Drawn By: MPD/CMS	Checked By: MPD
File: 19047_901.dwg	Drawing No. **C-901**

THIS DRAWING AND OTHER RELATED DOCUMENTS, INCLUDING DOCUMENTS ON ELECTRONIC MEDIA, WERE PREPARED BY TWO FIFTEEN CONSULTING AND SHALL REMAIN THE PROPERTY OF TWO FIFTEEN CONSULTING. ALL INFORMATION SHALL BE USED ONLY FOR DESCRIBING, CONSTRUCTING, OR INSTALLING THE WORK SHOWN AT THE SITE OF THE WORK SPECIFIED HEREON. ANY OTHER USE OF THIS DRAWING, INCLUDING WITHOUT LIMITATION, ANY REPRODUCTION OR ALTERATION IS STRICTLY PROHIBITED, AND TWO FIFTEEN CONSULTING SHALL BE INDEMNIFIED FROM LIABILITY ARISING FROM THE CONSTRUCTION, USE, OR RESULT OF SUCH UNAUTHORIZED USE OR CHANGES.

EXHIBIT B

CAMPUS MAP

Stephen F. Austin State University

1. AG SHOP AND SOILS LAB (F5)
2. AGRICULTURE BUILDING (F6)
3. AGRICULTURE GREENHOUSE (F7)
4. ART BUILDING (F6)
5. ART STUDIO (F6)
6. AUSTIN BUILDING (SFA ADMINISTRATION) (C6)
7. BAKER PATTILLO STUDENT CENTER (B7)
8. BIOLOGY GREENHOUSE (C7)
9. BOYNTON BUILDING (B6)
10. BRUNDRETT CONSERVATION EDUCATION BUILDING (D2)
11. COLE STEM BUILDING (C8)
12. DEWITT SCHOOL OF NURSING (A1)
13. DUGAS LIBERAL ARTS NORTH (C6)
14. EAST COLLEGE DINING HALL (E6)
15. EDUCATION ANNEX (D8)
16. FERGUSON BUILDING (C6)
17. FIELD HOUSE (F3)
18. FORESTRY BUILDING (D5)
19. FORESTRY GREENHOUSE (E5)
20. FORESTRY LABORATORIES (D5)
21. GAYLA MIZE GARDEN (I8)
22. GRIFFITH FINE ARTS BUILDING (A6)
23. GRIFFITH HALL (A8)
24. GROUNDS AND TRANSPORTATION (H8)
25. HALL 10 (B8)
26. HALL 14 (E6)
27. HALL 16 (F6)
28. HALL 20 (G5)
29. HINDS PARK (F1)
30. HOMER BRYCE STADIUM (F4)
31. HPE COMPLEX (D8)
32. HUMAN SCIENCES NORTH (D9)
33. HUMAN SCIENCES SOUTH (D9)
34. HUMAN SERVICES BUILDING (D6)
35. INTRAMURAL FIELDS (F8)
36. JANICE A. PATTILLO EARLY CHILDHOOD RESEARCH CENTER (D4)
37. JOHNSON COLISEUM (H6)
38. KENNEDY AUDITORIUM (C7)
39. KERR HALL (B8)
40. KINGHAM CHILDREN'S GARDEN (G5)
41. LEHMANN CHEMISTRY BUILDING (C7)
42. LUMBERJACK LANDING (E6)
43. LUMBERJACK LODGE (D6)
44. LUMBERJACK VILLAGE COMMUNITY BUILDING (C8)
45. LUMBERJACK VILLAGE E (C9)
46. LUMBERJACK VILLAGE S (C9)
47. LUMBERJACK VILLAGE W (B9)
48. MAST ARBORETUM (G7)
49. MATH BUILDING (D7)
50. MAYS HALL (B8)
51. MCGEE BUSINESS BUILDING (D7)
52. MCKIBBEN EDUCATION BUILDING (D6)
53. MCKINNEY FINE ARTS ANNEX (A5)
54. MILITARY SCIENCE BUILDING (F5)
55. MILLER SCIENCE BUILDING (C7)
56. MURPHY WELLNESS CENTER (E4)
57. MUSIC PREPARATORY DIVISION (D1)
58. NORTH HALL (C8)
59. PARKING GARAGE, AIKMAN (C6)
60. PARKING GARAGE, STUDENT CENTER (B7)
61. PARKING GARAGE, VILLAGE (B8)
62. PARKING GARAGE, WILSON (E7)
63. PEARMAN ALUMNI CENTER (B6)
64. PERMITS AND CITATIONS (E6)
65. PHYSICAL PLANT (F6)
66. PINEYWOODS NATIVE PLANT CENTER (D2)
67. PRESIDENT'S RESIDENCE (C9)
68. PRESS BOX (E4)
69. PRINTING SERVICES/RESIDENCE LIFE OPERATIONS (I6)
70. PURCHASING AND CENTRAL STORES (F6)
71. RUBY M. MIZE AZALEA GARDEN (H7)
72. RUSK BUILDING (C6)
73. SAFETY OFFICE (D1)
74. SCHLIEF TENNIS COMPLEX (E9)
75. SCHOOL OF ART FILM HOUSE (B9)
76. SFA THEATER (SCENE SHOP) (A5)
77. SHELTON GYM (D7)
78. SOCIAL WORK BUILDING (B9)
79. SOUTH HALL (C8)
80. STEEN HALL (E5)
81. STEEN LIBRARY (D7)
82. STEPHEN F. AUSTIN STATUE (D7)
83. STONE FORT MUSEUM (C7)
84. STUDENT RECREATION CENTER (E7)
85. SWIMMING POOL (OUTDOOR) (E8)
86. TECHNICAL SUPPORT CENTER (E1)
87. TICKET BOOTH (F4)
88. TUCKER HEALTH SERVICES BUILDING (D5)
89. TUCKER HOUSE (D2)
90. UNIVERSITY POLICE DEPARTMENT (C5)
91. U.S. FOREST SERVICE (D5)
92. VISITOR INFORMATION BOOTH (A7)
93. WISELY HALL (C5)
94. WRIGHT MUSIC BUILDING (B6)

UPDATED AUGUST 2018

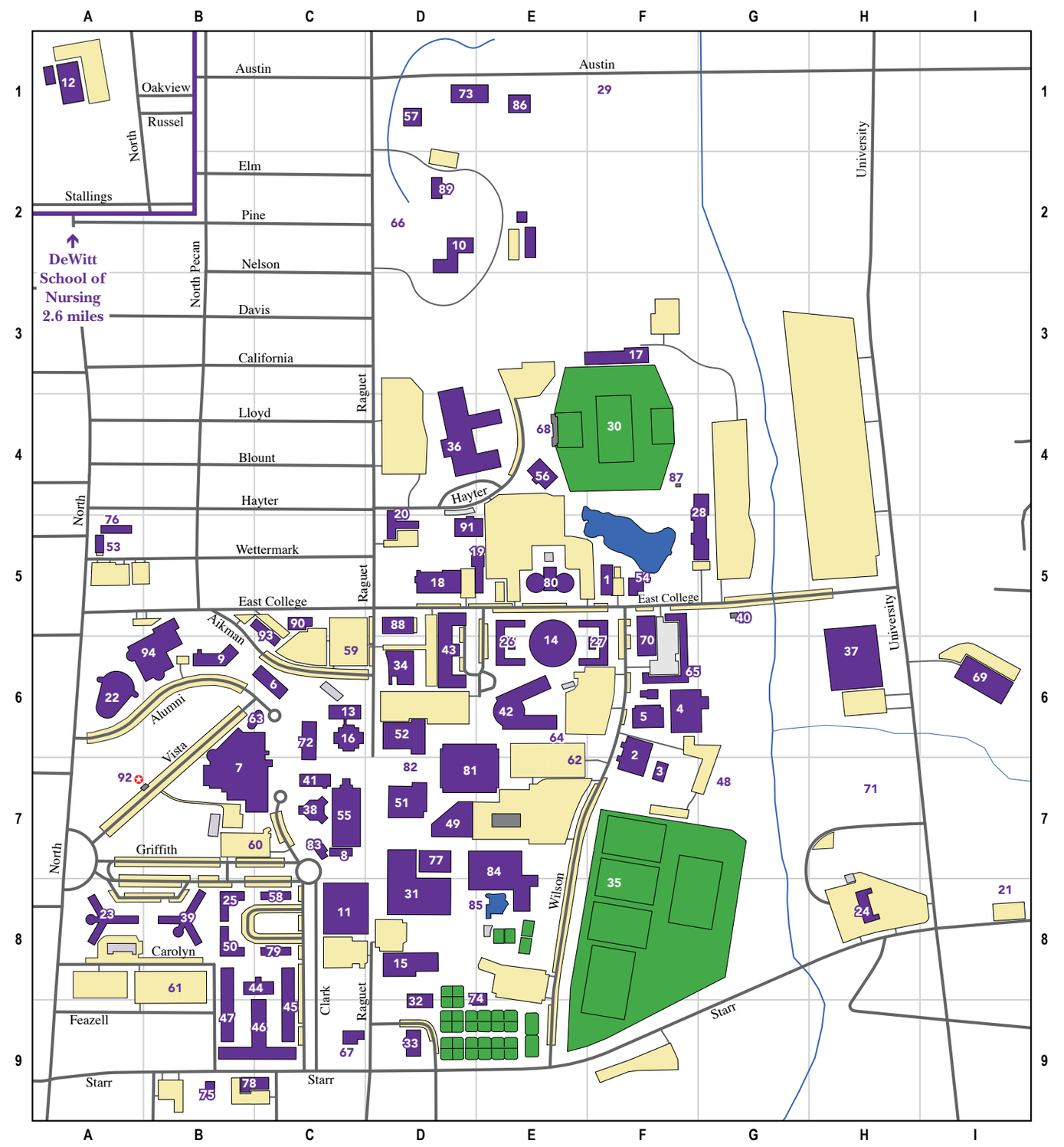

EXHIBIT C

HUB SUBCONTRACTING PLAN

Rev. 2/17

HUB Subcontracting Plan (HSP)

QUICK CHECKLIST

While this HSP Quick Checklist is being provided to merely assist you in readily identifying the sections of the HSP form that you will need to complete, it is very important that you adhere to the instructions in the HSP form and instructions provided by the contracting agency.

➤ **If you will be awarding <u>all</u> of the subcontracting work you have to offer under the contract to <u>only</u> Texas certified HUB vendors, complete:**

- ☐ Section 1 - Respondent and Requisition Information
- ☐ Section 2 a. - Yes, I will be subcontracting portions of the contract.
- ☐ Section 2 b. - List all the portions of work you will subcontract, and indicate the percentage of the contract you expect to award to Texas certified HUB vendors.
- ☐ Section 2 c. - Yes
- ☐ Section 4 - Affirmation
- ☐ GFE Method A (Attachment A) - Complete an Attachment A for each of the subcontracting opportunities you listed in Section 2 b.

➤ **If you will be subcontracting any portion of the contract to Texas certified HUB vendors and Non-HUB vendors, and the aggregate percentage of all the subcontracting work you will be awarding to the Texas certified HUB vendors with which you <u>do not</u> have a *<u>continuous contract</u>** in place for more than five (5) years *<u>meets or exceeds</u>* the HUB Goal the contracting agency identified in the "Agency Special Instructions/Additional Requirements", complete:**

- ☐ Section 1 - Respondent and Requisition Information
- ☐ Section 2 a. - Yes, I will be subcontracting portions of the contract.
- ☐ Section 2 b. - List all the portions of work you will subcontract, and indicate the percentage of the contract you expect to award to Texas certified HUB vendors and Non-HUB vendors.
- ☐ Section 2 c. - No
- ☐ Section 2 d. - Yes
- ☐ Section 4 - Affirmation
- ☐ GFE Method A (Attachment A) - Complete an Attachment A for each of the subcontracting opportunities you listed in Section 2 b.

➤ **If you will be subcontracting any portion of the contract to Texas certified HUB vendors and Non-HUB vendors or only to Non-HUB vendors, and the aggregate percentage of all the subcontracting work you will be awarding to the Texas certified HUB vendors with which you <u>do not</u> have a *<u>continuous contract</u>** in place for more than five (5) years *<u>does not meet or exceed</u>* the HUB Goal the contracting agency identified in the "Agency Special Instructions/Additional Requirements", complete:**

- ☐ Section 1 - Respondent and Requisition Information
- ☐ Section 2 a. - Yes, I will be subcontracting portions of the contract.
- ☐ Section 2 b. - List all the portions of work you will subcontract, and indicate the percentage of the contract you expect to award to Texas certified HUB vendors and Non-HUB vendors.
- ☐ Section 2 c. - No
- ☐ Section 2 d. - No
- ☐ Section 4 - Affirmation
- ☐ GFE Method B (Attachment B) - Complete an Attachment B for each of the subcontracting opportunities you listed in Section 2 b.

➤ **If you will not be subcontracting any portion of the contract and will be fulfilling the entire contract with your own resources (i.e., employees, supplies, materials and/or equipment), complete:**

- ☐ Section 1 - Respondent and Requisition Information
- ☐ Section 2 a. - No, I will not be subcontracting any portion of the contract, and I will be fulfilling the entire contract with my own resources.
- ☐ Section 3 - Self Performing Justification
- ☐ Section 4 - Affirmation

***<u>Continuous Contract</u>:** Any existing written agreement (including any renewals that are exercised) between a prime contractor and a HUB vendor, where the HUB vendor provides the prime contractor with goods or service, to include under the same contract for a specified period of time. The frequency the HUB vendor is utilized or paid during the term of the contract is not relevant to whether the contract is considered continuous. Two or more contracts that run concurrently or overlap one another for different periods of time are considered by CPA to be individual contracts rather than renewals or extensions to the original contract. In such situations the prime contractor and HUB vendor are entering (have entered) into "new" contracts.*

Rev. 2/17

HUB Subcontracting Plan (HSP)

In accordance with Texas Gov't Code §2161.252, the contracting agency has determined that subcontracting opportunities are probable under this contract. Therefore, all respondents, including State of Texas certified Historically Underutilized Businesses (HUBs) must complete and submit this State of Texas HUB Subcontracting Plan (HSP) with their response to the bid requisition (solicitation).

NOTE: Responses that do not include a completed HSP shall be rejected pursuant to Texas Gov't Code §2161.252(b).

The HUB Program promotes equal business opportunities for economically disadvantaged persons to contract with the State of Texas in accordance with the goals specified in the 2009 State of Texas Disparity Study. The statewide HUB goals defined in 34 Texas Administrative Code (TAC) §20.284 are:

- ***11.2 percent for heavy construction other than building contracts,***
- ***21.1 percent for all building construction, including general contractors and operative builders' contracts,***
- ***32.9 percent for all special trade construction contracts,***
- ***23.7 percent for professional services contracts,***
- ***26.0 percent for all other services contracts, and***
- ***21.1 percent for commodities contracts.***

- - Agency Special Instructions/Additional Requirements - -

*In accordance with 34 TAC §20.285(d)(1)(D)(iii), a respondent (prime contractor) may demonstrate good faith effort to utilize Texas certified HUBs for its subcontracting opportunities if the total value of the respondent's subcontracts with Texas certified HUBs meets or exceeds the statewide HUB goal or the agency specific HUB goal, whichever is higher. When a respondent uses this method to demonstrate good faith effort, the respondent must identify the HUBs with which it will subcontract. If using existing contracts with Texas certified HUBs to satisfy this requirement, only the aggregate percentage of the contracts expected to be subcontracted to HUBs with which the respondent **does not** have a **continuous contract*** in place for **more than five (5) years** shall qualify for meeting the HUB goal. This limitation is designed to encourage vendor rotation as recommended by the 2009 Texas Disparity Study.*

The HUB Subcontracting GOAL for this procurement is: 32.9 % for Special Trades contracts. Vendors are required to provide a minimum 7 working days notice to notice of subcontracting opportunities.

Failure to submit a HUB Subcontracting Plan will disqualify the entire response from consideration. The HUB Subcontracting Plan (HSP) will be evaluated independently of the response. If the HSP does not reflect a good faith effort to subcontract with HUBs, the entire response will be disqualified.

SECTION 1: RESPONDENT AND REQUISITION INFORMATION

a. Respondent (Company) Name: _____ State of Texas VID #: _____

Point of Contact: _____ Phone #: _____

E-mail Address: _____ Fax #: _____

b. Is your company a State of Texas certified HUB? ☐ **- Yes** ☐ **- No**

c. Requisition #: _____ Bid Open Date: _____ (mm/dd/yyyy)

Enter your company's name here: _____ Requisition #: _____

SECTION 2: RESPONDENT'S SUBCONTRACTING INTENTIONS

After dividing the contract work into reasonable lots or portions to the extent consistent with prudent industry practices, and taking into consideration the scope of work to be performed under the proposed contract, including all potential subcontracting opportunities, the respondent must determine what portions of work, **including contracted staffing, goods and services will be subcontracted**. Note: In accordance with 34 TAC §20.282, a "Subcontractor" means a person who contracts with a prime contractor to work, to supply commodities, or to contribute toward completing work for a governmental entity.

a. Check the appropriate box (Yes or No) that identifies your subcontracting intentions:

☐ - *Yes*, I will be subcontracting portions of the contract. (If *Yes*, complete Item b of this SECTION and continue to Item c of this SECTION.)

☐ - *No*, I will not be subcontracting any portion of the contract, and I will be fulfilling the entire contract with my own resources, including employees, goods and services. (If *No*, continue to SECTION 3 and SECTION 4.)

b. List all the portions of work (subcontracting opportunities) you will subcontract. Also, based on the total value of the contract, identify the percentages of the contract you expect to award to Texas certified HUBs, and the percentage of the contract you expect to award to vendors that are not a Texas certified HUB (i.e., Non-HUB).

Item #	Subcontracting Opportunity Description	HUBs		Non-HUBs
		Percentage of the contract expected to be subcontracted to HUBs with which you do not have a continuous contract* in place for more than five (5) years.	**Percentage of the contract expected to be subcontracted to HUBs with which you have a continuous contract* in place for more than five (5) years.**	Percentage of the contract expected to be subcontracted to non-HUBs.
1		%	%	%
2		%	%	%
3		%	%	%
4		%	%	%
5		%	%	%
6		%	%	%
7		%	%	%
8		%	%	%
9		%	%	%
10		%	%	%
11		%	%	%
12		%	%	%
13		%	%	%
14		%	%	%
15		%	%	%
	Aggregate percentages of the contract expected to be subcontracted:	**%**	**%**	**%**

(Note: If you have more than fifteen subcontracting opportunities, a continuation sheet is available online at https://www.comptroller.texas.gov/purchasing/vendor/hub/forms.php).

c. Check the appropriate box (Yes or No) that indicates whether you will be using **only** Texas certified HUBs to perform **all** of the subcontracting opportunities you listed in SECTION 2, Item b.

☐ - *Yes* (If *Yes*, continue to SECTION 4 and complete an "HSP Good Faith Effort - Method A (Attachment A)" for **each** of the subcontracting opportunities you listed.)

☐ - *No* (If *No*, continue to Item d, of this SECTION.)

d. Check the appropriate box (Yes or No) that indicates whether the aggregate expected percentage of the contract you will subcontract **with Texas certified HUBs** with which you **do not** have a **continuous contract*** in place with for **more than five (5) years**, **meets or exceeds** the HUB goal the contracting agency identified on page 1 in the "**Agency Special Instructions/Additional Requirements**."

☐ - *Yes* (If *Yes*, continue to SECTION 4 and complete an "HSP Good Faith Effort - Method A (Attachment A)" for **each** of the subcontracting opportunities you listed.)

☐ - *No* (If *No*, continue to SECTION 4 and complete an "HSP Good Faith Effort - Method B (Attachment B)" for **each** of the subcontracting opportunities you listed.)

***Continuous Contract**: Any existing written agreement (including any renewals that are exercised) between a prime contractor and a HUB vendor, where the HUB vendor provides the prime contractor with goods or service under the same contract for a specified period of time. The frequency the HUB vendor is utilized or paid during the term of the contract is not relevant to whether the contract is considered continuous. Two or more contracts that run concurrently or overlap one another for different periods of time are considered by CPA to be individual contracts rather than renewals or extensions to the original contract. In such situations the prime contractor and HUB vendor are entering (have entered) into "new" contracts.*

Enter your company's name here: _____ Requisition #: _____

SECTION 2: RESPONDENT's SUBCONTRACTING INTENTIONS (CONTINUATION SHEET)

This page can be used as a continuation sheet to the HSP Form's page 2, Section 2, Item b. Continue listing the portions of work (subcontracting opportunities) you will subcontract. Also, based on the total value of the contract, identify the percentages of the contract you expect to award to Texas certified HUBs, and the percentage of the contract you expect to award to vendors that are not a Texas certified HUB (i.e., Non-HUB).

Item #	Subcontracting Opportunity Description	HUBs		Non-HUBs
		Percentage of the contract expected to be subcontracted to HUBs with which you do not have a continuous contract* in place for more than five (5) years.	**Percentage of the contract expected to be subcontracted to HUBs with which you have a continuous contract* in place for more than five (5) years.**	**Percentage of the contract expected to be subcontracted to non-HUBs.**
16		%	%	%
17		%	%	%
18		%	%	%
19		%	%	%
20		%	%	%
21		%	%	%
22		%	%	%
23		%	%	%
24		%	%	%
25		%	%	%
26		%	%	%
27		%	%	%
28		%	%	%
29		%	%	%
30		%	%	%
31		%	%	%
32		%	%	%
33		%	%	%
34		%	%	%
35		%	%	%
36		%	%	%
37		%	%	%
38		%	%	%
39		%	%	%
40		%	%	%
41		%	%	%
42		%	%	%
43		%	%	%
	Aggregate percentages of the contract expected to be subcontracted:	**%**	**%**	**%**

***Continuous Contract**: Any existing written agreement (including any renewals that are exercised) between a prime contractor and a HUB vendor, where the HUB vendor provides the prime contractor with goods or service under the same contract for a specified period of time. The frequency the HUB vendor is utilized or paid during the term of the contract is not relevant to whether the contract is considered continuous. Two or more contracts that run concurrently or overlap one another for different periods of time are considered by CPA to be individual contracts rather than renewals or extensions to the original contract. In such situations the prime contractor and HUB vendor are entering (have entered) into "new" contracts.*

Enter your company's name here: _____ Requisition #: _____

SECTION 3: SELF PERFORMING JUSTIFICATION (If you responded "No" to SECTION 2, Item a, you must complete this SECTION and continue to SECTION 4.) If you responded "No" to SECTION 2, Item a, in the space provided below **explain how** your company will perform the entire contract with its own employees, supplies, materials and/or equipment.

SECTION 4: AFFIRMATION

As evidenced by my signature below, I affirm that I am an authorized representative of the respondent listed in SECTION 1, and that the information and supporting documentation submitted with the HSP is true and correct. Respondent understands and agrees that, if awarded any portion of the requisition:

- The respondent will provide notice as soon as practical to all the subcontractors (HUBs and Non-HUBs) of their selection as a subcontractor for the awarded contract. The notice must specify at a minimum the contracting agency's name and its point of contact for the contract, the contract award number, the subcontracting opportunity they (the subcontractor) will perform, the approximate dollar value of the subcontracting opportunity and the expected percentage of the total contract that the subcontracting opportunity represents. A copy of the notice required by this section must also be provided to the contracting agency's point of contact for the contract no later than ten (10) working days after the contract is awarded.
- The respondent must submit monthly compliance reports (Prime Contractor Progress Assessment Report – PAR) to the contracting agency, verifying its compliance with the HSP, including the use of and expenditures made to its subcontractors (HUBs and Non-HUBs). (The PAR is available at https://www.comptroller.texas.gov/purchasing/docs/hub-forms/ProgressAssessmentReportForm.xls).
- The respondent must seek approval from the contracting agency prior to making any modifications to its HSP, including the hiring of additional or different subcontractors and the termination of a subcontractor the respondent identified in its HSP. If the HSP is modified without the contracting agency's prior approval, respondent may be subject to any and all enforcement remedies available under the contract or otherwise available by law, up to and including debarment from all state contracting.
- The respondent must, upon request, allow the contracting agency to perform on-site reviews of the company's headquarters and/or work-site where services are being performed and must provide documentation regarding staffing and other resources.

Signature	Printed Name	Title	Date (mm/dd/yyyy)

Reminder:

- If you responded "Yes" to SECTION 2, Items c or d, you must complete an "HSP Good Faith Effort - Method A (Attachment A)" for each of the subcontracting opportunities you listed in SECTION 2, Item b.
- If you responded "No" SECTION 2, Items c and d, you must complete an "HSP Good Faith Effort - Method B (Attachment B)" for each of the subcontracting opportunities you listed in SECTION 2, Item b.

HSP Good Faith Effort - Method A (Attachment A)

Rev. 2/17

Enter your company's name here: _____ Requisition #: _____

IMPORTANT: If you responded "*Yes*" to **SECTION 2, Items c** or **d** of the completed HSP form, you must submit a completed "HSP Good Faith Effort - Method A (Attachment A)" for each of the subcontracting opportunities you listed in **SECTION 2, Item b** of the completed HSP form. You may photo-copy this page or download the form at https://www.comptroller.texas.gov/purchasing/docs/hub-forms/hub-sbcont-plan-gfe-achm-a.pdf

SECTION A-1: SUBCONTRACTING OPPORTUNITY

Enter the item number and description of the subcontracting opportunity you listed in SECTION 2, Item b, of the completed HSP form for which you are completing the attachment.

Item Number: _____ Description: _____

SECTION A-2: SUBCONTRACTOR SELECTION

List the subcontractor(s) you selected to perform the subcontracting opportunity you listed above in SECTION A-1. Also identify whether they are a Texas certified HUB and their Texas Vendor Identification (VID) Number or federal Employer Identification Number (EIN), the approximate dollar value of the work to be subcontracted, and the expected percentage of work to be subcontracted. When searching for Texas certified HUBs and verifying their HUB status, ensure that you use the State of Texas' Centralized Master Bidders List (CMBL) - Historically Underutilized Business (HUB) Directory Search located at http://mycpa.cpa.state.tx.us/tpasscmblsearch/index.jsp. HUB status code "**A**" signifies that the company is a Texas certified HUB.

Company Name	Texas certified HUB	Texas VID or federal EIN Do not enter Social Security Numbers. If you do not know their VID / EIN, leave their VID / EIN field blank.	Approximate Dollar Amount	Expected Percentage of Contract
	☐ - Yes ☐ - No		$	%
	☐ - Yes ☐ - No		$	%
	☐ - Yes ☐ - No		$	%
	☐ - Yes ☐ - No		$	%
	☐ - Yes ☐ - No		$	%
	☐ - Yes ☐ - No		$	%
	☐ - Yes ☐ - No		$	%
	☐ - Yes ☐ - No		$	%
	☐ - Yes ☐ - No		$	%
	☐ - Yes ☐ - No		$	%
	☐ - Yes ☐ - No		$	%
	☐ - Yes ☐ - No		$	%
	☐ - Yes ☐ - No		$	%
	☐ - Yes ☐ - No		$	%
	☐ - Yes ☐ - No		$	%
	☐ - Yes ☐ - No		$	%
	☐ - Yes ☐ - No		$	%
	☐ - Yes ☐ - No		$	%
	☐ - Yes ☐ - No		$	%
	☐ - Yes ☐ - No		$	%
	☐ - Yes ☐ - No		$	%
	☐ - Yes ☐ - No		$	%
	☐ - Yes ☐ - No		$	%

REMINDER: As specified in SECTION 4 of the completed HSP form, if you (respondent) are awarded any portion of the requisition, you are required to provide notice as soon as practical to all the subcontractors (HUBs and Non-HUBs) of their selection as a subcontractor. The notice must specify at a minimum the contracting agency's name and its point of contact for the contract, the contract award number, the subcontracting opportunity they (the subcontractor) will perform, the approximate dollar value of the subcontracting opportunity and the expected percentage of the total contract that the subcontracting opportunity represents. A copy of the notice required by this section must also be provided to the contracting agency's point of contact for the contract no later than ten (10) working days after the contract is awarded.

HSP Good Faith Effort - Method B (Attachment B)

Rev. 2/17

Enter your company's name here: _____ Requisition #: _____

IMPORTANT*:** If you responded "No***" to **SECTION 2, Items c** and **d** of the completed HSP form, you must submit a completed "HSP Good Faith Effort - Method B (Attachment B)" for **each** of the subcontracting opportunities you listed in **SECTION 2, Item b** of the completed HSP form. You may photo-copy this page or download the form at https://www.comptroller.texas.gov/purchasing/docs/hub-forms/hub-sbcont-plan-gfe-achm-b.pdf..

SECTION B-1: SUBCONTRACTING OPPORTUNITY

Enter the item number and description of the subcontracting opportunity you listed in SECTION 2, Item b, of the completed HSP form for which you are completing the attachment.

Item Number: _____ Description: _____

SECTION B-2: MENTOR PROTÉGÉ PROGRAM

If respondent is participating as a Mentor in a State of Texas Mentor Protégé Program, submitting its Protégé (Protégé must be a State of Texas certified HUB) as a subcontractor to perform the subcontracting opportunity listed in **SECTION B-1**, constitutes a good faith effort to subcontract with a Texas certified HUB towards that specific portion of work.

Check the appropriate box (Yes or No) that indicates whether you will be subcontracting the portion of work you listed in SECTION B-1 to your Protégé.

☐ - Yes (If *Yes*, continue to SECTION B-4.)

☐ - No / Not Applicable (If *No* or *Not Applicable*, continue to SECTION B-3 and SECTION B-4.)

SECTION B-3: NOTIFICATION OF SUBCONTRACTING OPPORTUNITY

When completing this section you MUST comply with items a, b, c and d, thereby demonstrating your Good Faith Effort of having notified Texas certified HUBs and trade organizations or development centers about the subcontracting opportunity you listed in SECTION B-1. Your notice should include the scope of work, information regarding the location to review plans and specifications, bonding and insurance requirements, required qualifications, and identify a contact person. When sending notice of your subcontracting opportunity, you are encouraged to use the attached HUB Subcontracting Opportunity Notice form, which is also available online at https://www.comptroller.texas.gov/purchasing/docs/hub-forms/HUBSubcontractingOpportunityNotificationForm.pdf.

Retain supporting documentation (i.e., certified letter, fax, e-mail) demonstrating evidence of your good faith effort to notify the Texas certified HUBs and trade organizations or development centers. Also, be mindful that a working day is considered a normal business day of a state agency, not including weekends, federal or state holidays, or days the agency is declared closed by its executive officer. The initial day the subcontracting opportunity notice is sent/provided to the HUBs and to the trade organizations or development centers is considered to be "day zero" and does not count as one of the seven (7) working days.

a. Provide written notification of the subcontracting opportunity you listed in SECTION B-1, to three (3) or more Texas certified HUBs. Unless the contracting agency specified a different time period, you must allow the HUBs at least seven (7) working days to respond to the notice prior to you submitting your bid response to the contracting agency. When searching for Texas certified HUBs and verifying their HUB status, ensure that you use the State of Texas' Centralized Master Bidders List (CMBL) - Historically Underutilized Business (HUB) Directory Search located at http://mycpa.cpa.state.tx.us/tpasscmblsearch/index.jsp. HUB status code "**A**" signifies that the company is a Texas certified HUB.

b. List the **three (3) Texas certified HUBs** you notified regarding the subcontracting opportunity you listed in SECTION B-1. Include the company's Texas Vendor Identification (VID) Number, the date you sent notice to that company, and indicate whether it was responsive or non-responsive to your subcontracting opportunity notice.

Company Name	Texas VID (Do not enter Social Security Numbers.)	Date Notice Sent (mm/dd/yyyy)	Did the HUB Respond?
			☐ - Yes ☐ - No
			☐ - Yes ☐ - No
			☐ - Yes ☐ - No

c. Provide written notification of the subcontracting opportunity you listed in SECTION B-1 to two (2) or more trade organizations or development centers in Texas to assist in identifying potential HUBs by disseminating the subcontracting opportunity to their members/participants. Unless the contracting agency specified a different time period, you must provide your subcontracting opportunity notice to trade organizations or development centers at least seven (7) working days prior to submitting your bid response to the contracting agency. A list of trade organizations and development centers that have expressed an interest in receiving notices of subcontracting opportunities is available on the Statewide HUB Program's webpage at https://www.comptroller.texas.gov/purchasing/vendor/hub/resources.php.

d. List **two (2) trade organizations or development centers** you notified regarding the subcontracting opportunity you listed in SECTION B-1. Include the date when you sent notice to it and indicate if it accepted or rejected your notice.

Trade Organizations or Development Centers	Date Notice Sent (mm/dd/yyyy)	Was the Notice Accepted?
		☐ - Yes ☐ - No
		☐ - Yes ☐ - No

HSP Good Faith Effort - Method B (Attachment B) Cont.

Rev. 2/17

Enter your company's name here: _____ Requisition #: _____

SECTION B-4: SUBCONTRACTOR SELECTION

Enter the item number and description of the subcontracting opportunity you listed in **SECTION 2, Item b,** of the completed HSP form for which you are completing the attachment.

a. Enter the item number and description of the subcontracting opportunity for which you are completing this Attachment B continuation page.

Item Number: _____ Description: _____

b. List the subcontractor(s) you selected to perform the subcontracting opportunity you listed in **SECTION B-1**. Also identify whether they are a Texas certified HUB and their Texas Vendor Identification (VID) Number or federal Emplioyer Identification Number (EIN), the approximate dollar value of the work to be subcontracted, and the expected percentage of work to be subcontracted. When searching for Texas certified HUBs and verifying their HUB status, ensure that you use the State of Texas' Centralized Master Bidders List (CMBL) - Historically Underutilized Business (HUB) Directory Search located at http://mycpa.cpa.state.tx.us/tpasscmblsearch/index.jsp. HUB status code "**A**" signifies that the company is a Texas certified HUB.

Company Name	Texas certified HUB	Texas VID or federal EIN Do not enter Social Security Numbers. If you do not know their VID / EIN, leave their VID / EIN field blank.	Approximate Dollar Amount	Expected Percentage of Contract
	☐ - Yes ☐ - No		$	%
	☐ - Yes ☐ - No		$	%
	☐ - Yes ☐ - No		$	%
	☐ - Yes ☐ - No		$	%
	☐ - Yes ☐ - No		$	%
	☐ - Yes ☐ - No		$	%
	☐ - Yes ☐ - No		$	%
	☐ - Yes ☐ - No		$	%
	☐ - Yes ☐ - No		$	%
	☐ - Yes ☐ - No		$	%

c. If any of the subcontractors you have selected to perform the subcontracting opportunity you listed in **SECTION B-1** is **not** a Texas certified HUB, provide written justification for your selection process (attach additional page if necessary):

REMINDER: As specified in SECTION 4 of the completed HSP form, if you (respondent) are awarded any portion of the requisition, you are required to provide notice as soon as practical to **all** the subcontractors (HUBs and Non-HUBs) of their selection as a subcontractor. The notice must specify at a minimum the contracting agency's name and its point of contact for the contract, the contract award number, the subcontracting opportunity it (the subcontractor) will perform, the approximate dollar value of the subcontracting opportunity and the expected percentage of the total contract that the subcontracting opportunity represents. A copy of the notice required by this section must also be provided to the contracting agency's point of contact for the contract no later than ten (10) working days after the contract is awarded.

Rev. 2/17

HUB Subcontracting Opportunity Notification Form

In accordance with Texas Gov't Code, Chapter 2161, each state agency that considers entering into a contract with an expected value of $100,000 or more shall, before the agency solicits bids, proposals, offers, or other applicable expressions of interest, determine whether subcontracting opportunities are probable under the contract. The state agency I have identified below in Section B has determined that subcontracting opportunities are probable under the requisition to which my company will be responding.

34 Texas Administrative Code, §20.285 requires all respondents (prime contractors) bidding on the contract to provide notice of each of their subcontracting opportunities to at least three (3) Texas certified HUBs (who work within the respective industry applicable to the subcontracting opportunity), and allow the HUBs at least seven (7) working days to respond to the notice prior to the respondent submitting its bid response to the contracting agency. In addition, at least seven (7) working days prior to submitting its bid response to the contracting agency, the respondent must provide notice of each of its subcontracting opportunities to two (2) or more trade organizations or development centers (in Texas) that serves members of groups (i.e., Asian Pacific American, Black American, Hispanic American, Native American, Woman, Service Disabled Veteran) identified in Texas Administrative Code §20.282(19)(C).

We respectfully request that vendors interested in bidding on the subcontracting opportunity scope of work identified in Section C, Item 2, reply no later than the date and time identified in Section C, Item 1. Submit your response to the point-of-contact referenced in Section A.

SECTION A: PRIME CONTRACTOR'S INFORMATION

Company Name: _____ State of Texas VID #: _____

Point-of-Contact: _____ Phone #: _____

E-mail Address: _____ Fax #: _____

SECTION B: CONTRACTING STATE AGENCY AND REQUISITION INFORMATION

Agency Name: _____

Point-of-Contact: _____ Phone #: _____

Requisition #: _____ Bid Open Date: _____ (mm/dd/yyyy)

SECTION C: SUBCONTRACTING OPPORTUNITY RESPONSE DUE DATE, DESCRIPTION, REQUIREMENTS AND RELATED INFORMATION

1. Potential Subcontractor's Bid Response Due Date:

If you would like for our company to consider your company's bid for the subcontracting opportunity identified below in Item 2,

we must receive your bid response no later than _____ (Central Time) on _____ (Date (mm/dd/yyyy)).

In accordance with 34 TAC §20.285, each notice of subcontracting opportunity shall be provided to at least three (3) Texas certified HUBs, and allow the HUBs at least seven (7) working days to respond to the notice prior to submitting our bid response to the contracting agency. In addition, at least seven (7) working days prior to us submitting our bid response to the contracting agency, we must provide notice of each of our subcontracting opportunities to two (2) or more trade organizations or development centers (in Texas) that serves members of groups (i.e., Asian Pacific American, Black American, Hispanic American, Native American, Woman, Service Disabled Veteran) identified in Texas Administrative Code, §20.282(19)(C).

(A working day is considered a normal business day of a state agency, not including weekends, federal or state holidays, or days the agency is declared closed by its executive officer. The initial day the subcontracting opportunity notice is sent/provided to the HUBs and to the trade organizations or development centers is considered to be "day zero" and does not count as one of the seven (7) working days.)

2. Subcontracting Opportunity Scope of Work:

3. Required Qualifications: ☐ - Not Applicable

4. Bonding/Insurance Requirements: ☐ - Not Applicable

5. Location to review plans/specifications: ☐ - Not Applicable

EASY HUB LOOKUP on the CMBL

In accordance with Texas Administrative Code 20.14, the following HUB lookup procedures have been developed utilizing the Comptroller of Public Accounts website to identify possible HUB Vendors for subcontracting opportunities.

To that end the following easy step by step instructions to identify NIGP codes and search for potential HUB subcontractors is provided by Stephen F. Austin State University. In addition, the University may have already completed searches that may be beneficial and include a list of potential HUB subcontractors that may be used by the Respondent. If you have a hard time reading the webpages cited, increase the page view to 200% or better.

For assistance with this instruction or further assistance in identifying potential HUB subcontractors, please contact Manny Guerrero, Vendor Relations Manager at 936-468-4529.

STEP 1: After identifying what areas that are going to be subcontracted for the project go to the following web address at Comptroller of Public Accounts:

https://cmblreg.cpa.state.tx.us/commodity_book/Alpha_index_inquiry.cfm

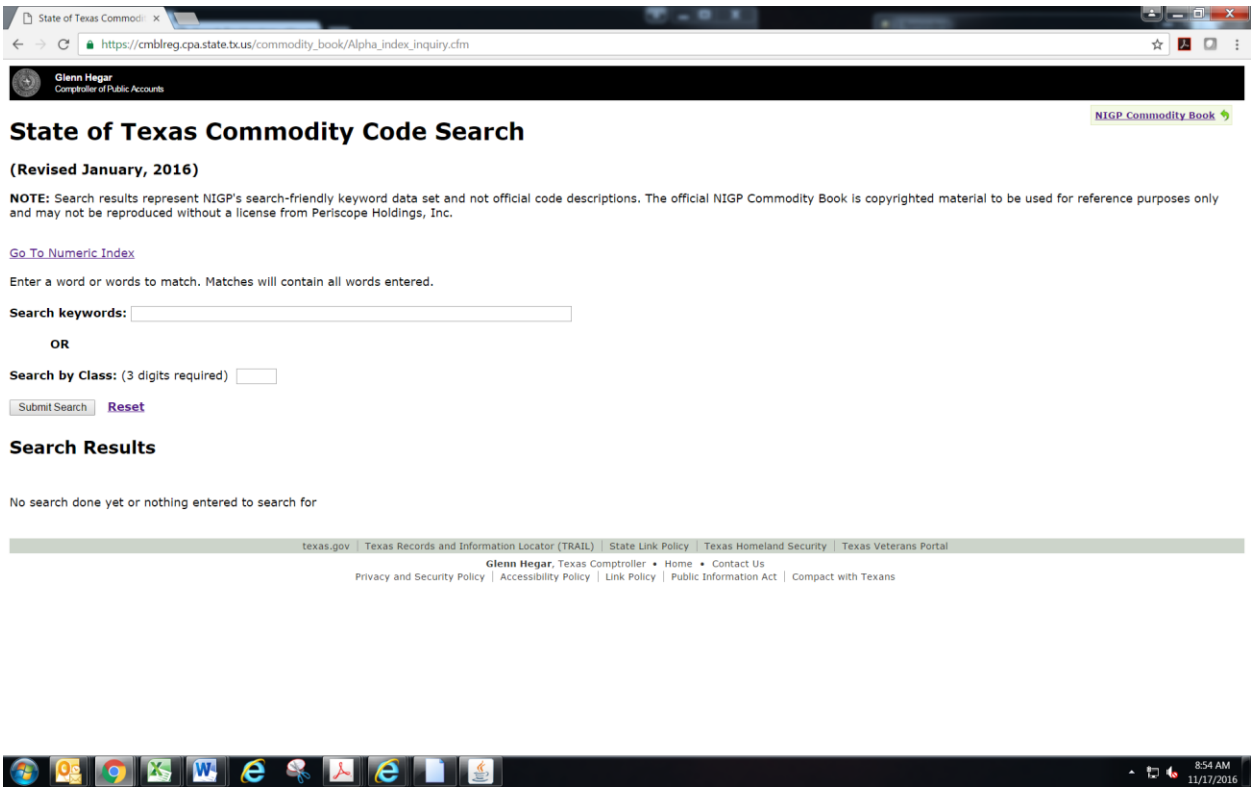

At this point type in the item you are looking for in Search keywords: (for this example we are looking for drywall services). Press Submit Search and the results will appear. See example below:

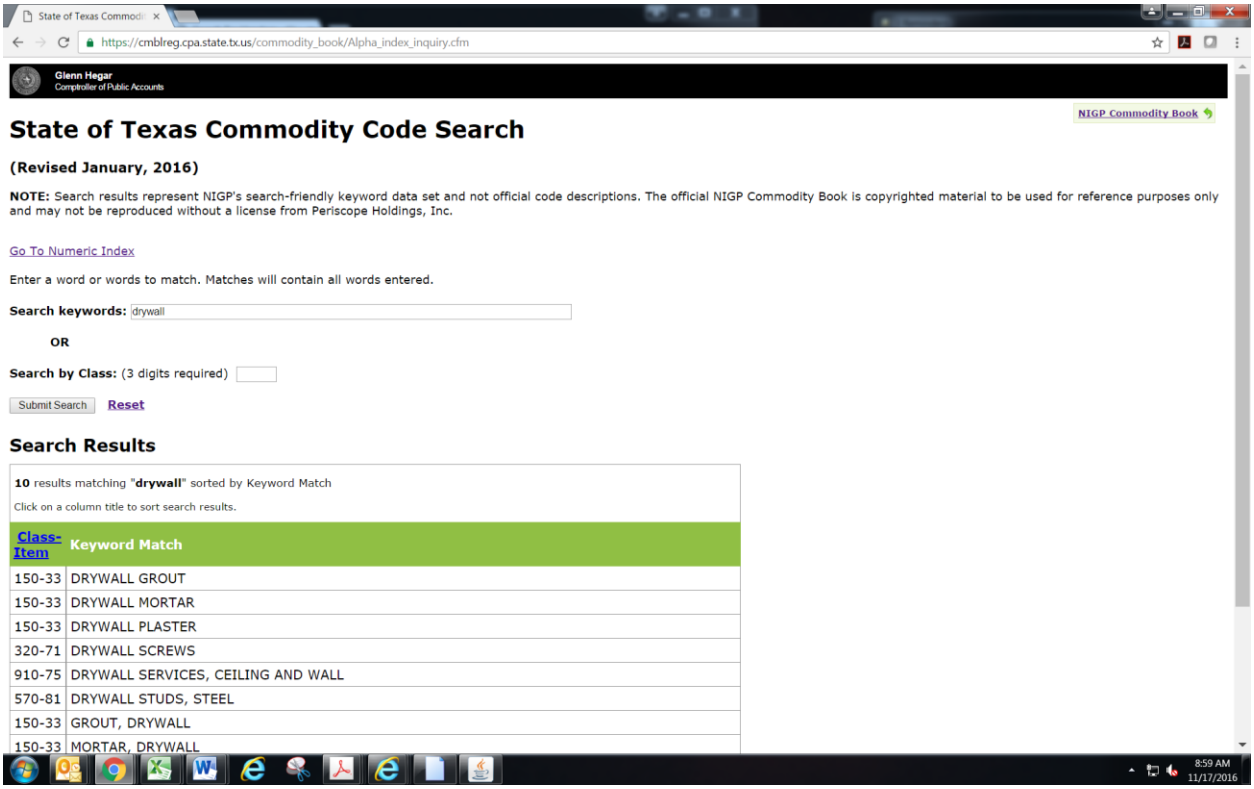

The page will list Keyword Match for drywall. In this example the Class-Item for Drywall Services, Ceiling and Wall is 910-75. Remember to write down the Class and Item numbers. You will do the same for other items that you will be subcontracting on the project. Once you have completed collecting all Class and Item numbers for sub-contracting opportunities you can precede to Step 2

STEP 2: With the Class and Item numbers you can search for HUB Vendors on the Centralized Master Bidders List – HUB Directory Search. Go to the following web address at Texas Comptroller of Public Accounts:

https://mycpa.cpa.state.tx.us/tpasscmblsearch/index.jsp

Under **SEARCH FOR** mark HUBs Only (you are looking for HUB vendors)

The EXAMPLE below is how the form should be filled out. Search for HUBs on CMBL; Selection 1: Class-Item; Select Fields For Output (Vendor ID, Company Name, Contact Person, City, Email, Phone, Business Description, HUB Eligibility, HUB Gender)

In the example below we are searching for NIGP Class Code 910, Items 75 (Drywall Services).

Once all the information needed has been marked. Click : **SEARCH.**

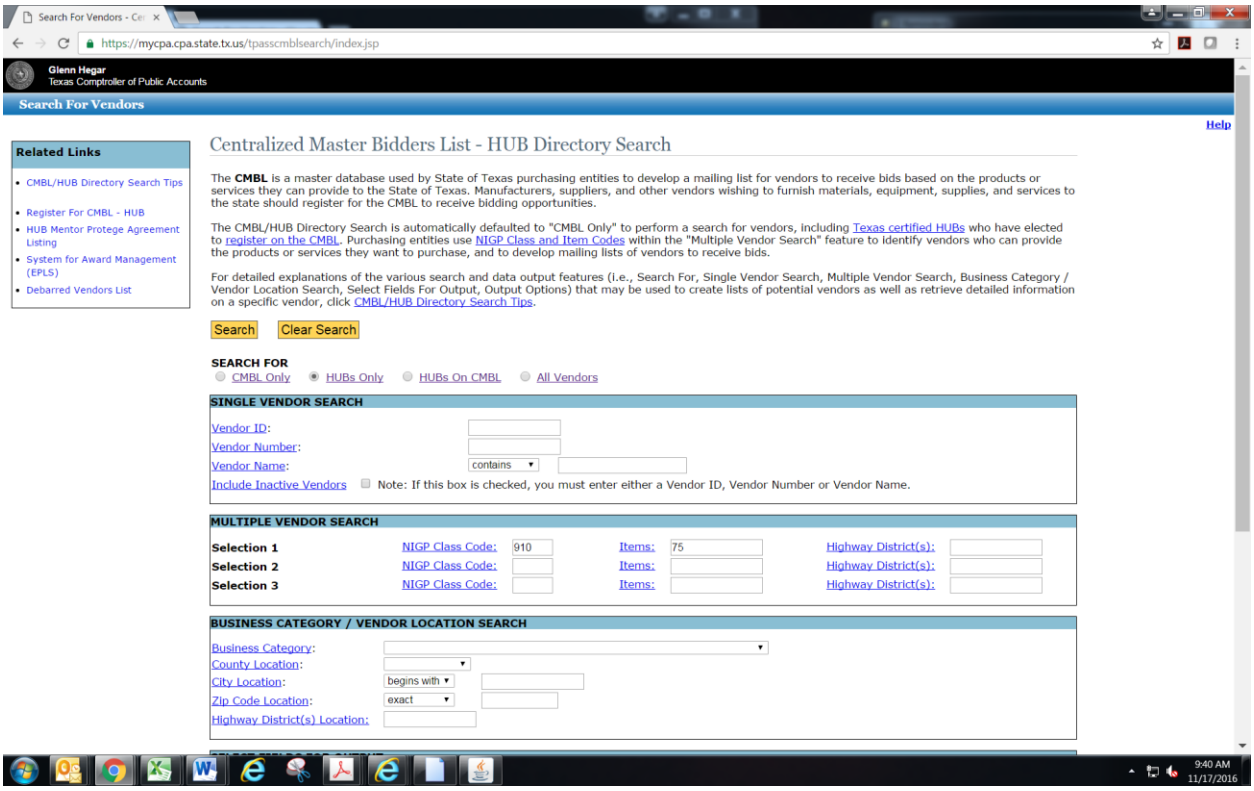

Once the search is completed, a page like the one below will appear listing all the HUB companies that are Class 910 and Item 75.

The search found 222 vendors where are HUB's.

At this point you should look at the Business Description to confirm that the company does indeed provide drywall services. Note that the first company listed 1DZ ENTERPRISE, L.L.C. does not list drywall services, instead the company business description list Janitorial Service – if at all possible you should not use this company in your Good Faith Efforts as there are other companies that list dry wall in their business description.

3 B'S CONTSTRUCTION does list drywall and is a good candidate for sending a request to bid the project.

YOU ARE REQUIRED TO SELECT THREE (3) HUB VENDORS TO CONTACT.

When looking for HUB Vendors to support you at SFA look for these vendors that are close to Nacogdoches and East Texas. If none can be found in our area, expand your search to the Dallas/Fort Worth area, Austin and Houston market areas.

NOTES:

1) SELECTING HUBS THAT ARE FROM EL PASO, AND FAR WEST TEXAS DOES NOT SHOW GOOD FAITH IN YOUR SELECTION PROCESS.

2) IF YOU DO NOT UNDERSTAND THESE DIRECTIONS OR NEED ASSITANCE PLEASE CONTACT THE SFA PROCUREMENT OFFICE FOR HELP.

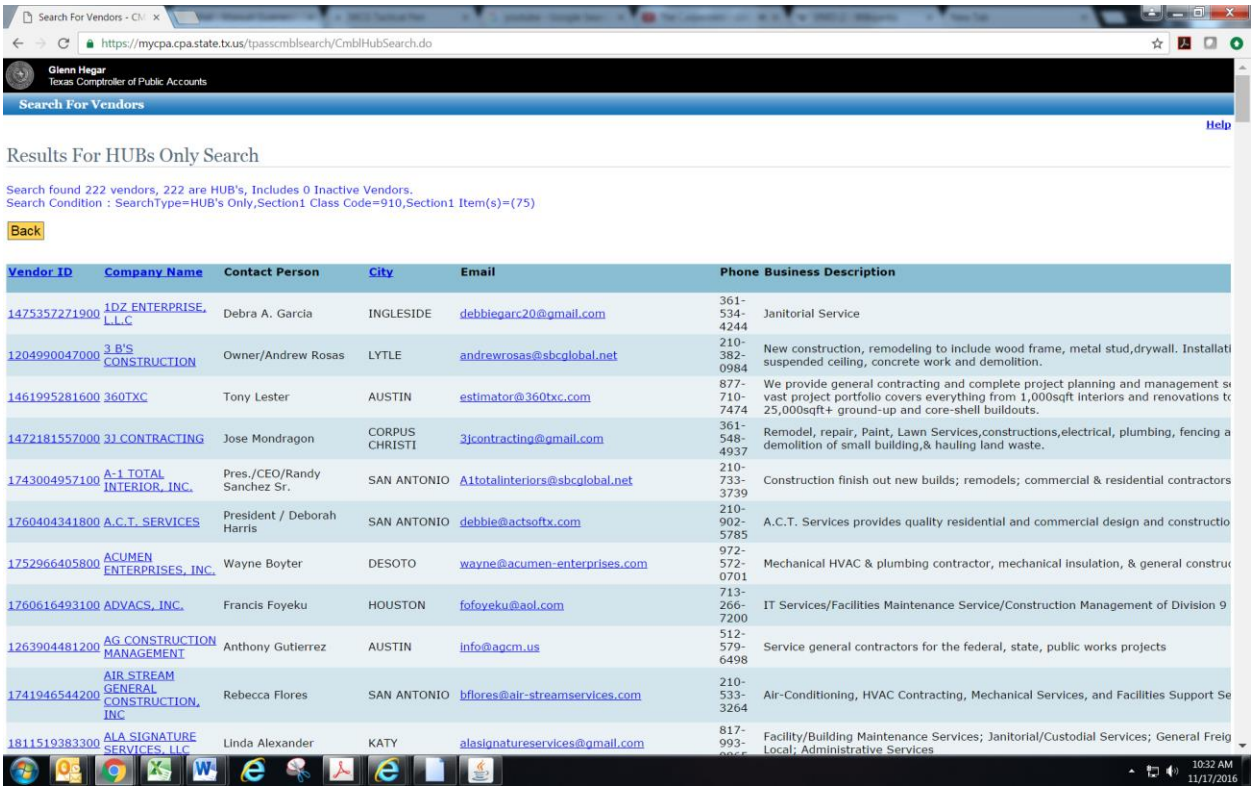

POTENTIAL HUB SUBCONTRACTORS PROVIDED WITH

ITB #PLAZA RENOVATION-2019
Issued by Stephen F. Austin State University
Opening Date/Time: December 4, 2019 at 3:00 PM

A complete list of State certified HUBs can be searched on-line at
https://mycpa.cpa.state.tx.us/tpasscmblsearch/index.jsp

The Respondent is responsible for compliance with the Good Faith Effort requirements outlined in the Invitation to Bid and HUB Subcontracting Plan documents.

NIGP Class Code – vendors in the following commodity class codes are identified on the following pages. The vendor is responsible to identify all commodity classes that may represent subcontracting opportunities.

91300 – Construction Services, Heavy, Including Maintenance and Repair Services

91350 – Construction, Streets, Major and Residential, Including Reconstruction

EXHIBIT D

UNIFORM GENERAL CONDITIONS

STEPHEN F. AUSTIN
STATE UNIVERSITY

NACOGDOCHES, TEXAS

This page is intentionally left blank

Uniform General Conditions for Construction Contracts

Table of Contents

Article 1. Definitions 5

Article 2. Wage Rates and Other Laws Governing Construction 9

Article 3. General Responsibilities of Owner and Contractor 12

Article 4. Historically Underutilized Business (HUB) Subcontracting Plan 20

Article 5. Bonds and Insurance 22

Article 6. Construction Documents, Coordination Documents, and Record Documents 29

Article 7. Construction Safety 32

Article 8. Quality Control 33

Article 9. Construction Schedules 39

Article 10. Payments 45

Article 11. Changes 49

Article 12. Project Completion and Acceptance 58

Article 13. Warranty and Guarantee 62

Article 14. Suspension and Termination 64

Article 15. Dispute Resolution 67

Article 16. Miscellaneous 68

Article 1. Definitions

Unless the context clearly requires another meaning, the following terms have the meaning assigned herein.

1.1 *Addendum/Addenda* means formally issued written or graphic modifications and/or interpretations of the Construction Documents that may add to, delete from, clarify or correct the description and/or scope of the Work. Addenda are issued during the bidding phase of the project.

1.2 *Application for Payment* means Contractor's monthly partial invoice for payment that includes any portion of the Work that has been completed for which an invoice has not been submitted and performed in accordance with the requirements of the Contract Documents. The Application for Payment accurately reflects the progress of the Work, is itemized based on the Schedule of Values, bears the notarized signature of Contractor, and shall not include subcontracted items for which Contractor does not intend to pay.

1.3 *Application for Final Payment* means Contractor's final invoice for payment that includes any portion of the Work that has been completed for which an invoice has not been submitted, amounts owing to adjustments to the final Contract Sum resulting from approved change orders, and release of remaining Contractor's retainage.

1.4 *Architect/Engineer (A/E)* means a person registered as an architect pursuant to Tex. Occ. Code Ann., Ch. 1051, as a landscape architect pursuant to Tex. Occ. Code Ann., Ch. 1052, a person licensed as a professional engineer pursuant Tex. Occ. Code Ann., Ch. 1001, and/or a firm employed by Owner or Design-Build Contractor to provide professional architectural or engineering services and to exercise overall responsibility for the design of a Project or a significant portion thereof, and to perform the contract administration responsibilities set forth in the Contract.

1.5 *Authority Having Jurisdiction* means a federal, state, local, or other regional department, or an individual such as a fire marshal, building official, electrical inspector, utility provider or other individual having statutory authority.

1.6 *Baseline Schedule* means the initial time schedule prepared by Contractor for Owner's information and acceptance that conveys Contractor's and Subcontractors' activities (including coordination and review activities required in the Contract Documents to be performed by A/E and ODR), durations, and sequence of work related to the entire Project to the extent required by the Contract Documents. The schedule clearly demonstrates the critical path of activities, durations and necessary predecessor conditions that drive the end date of the schedule. The Baseline Schedule shall not exceed the time limit current under the Contract Documents.

1.7 *Certificate of Final Completion* means the certificate issued by A/E that documents, to the best of A/E's knowledge and understanding, Contractor's completion of all

Contractor's Punchlist items and pre-final Punchlist items, final cleanup and Contractor's provision of Record Documents, operations and maintenance manuals, and all other closeout documents required by the Contract Documents.

1.8 *Certificate of Substantial Completion* means the certificate executed by the A/E, ODR and Contractor that documents to the best of A/E's and ODR's knowledge and understanding, Contractor's sufficient completion of the work in accordance with the Contract, so as to be operational and fit for the use intended.

1.9 *Change Order* means a written modification of the Contract between Owner and Contractor, signed by Owner, Contractor, and A/E. If the project equals or exceed $1,000,000, close-out documents shall also include building component information and values as specified in the Texas Higher Education System Generic Building Componentization Guidelines. If the project is less than $1,000,000, building component information and values shall be provided upon request by Owner.

1.10 *Close-out Documents* mean the product brochures, submittals, product/equipment maintenance and operations instructions, manuals, and other documents/warranties, record documents, affidavit of payment, release of lien and claim, and as may be further defined, identified, and required by the Contract Documents.

1.11 *Contract* means the entire agreement between Owner and Contractor, including all of the Contract Documents.

1.12 *Contract Date* is the date when the agreement between Owner and Contractor becomes effective.

1.13 *Contract Documents* mean those documents identified as a component of the agreement (Contract) between Owner and Contractor. These may include, but are not limited to, Drawings; Specifications; General, Supplementary General, and Special Conditions; and all pre-bid and/or pre-proposal addenda.

1.14 *Contract Sum* means the total compensation payable to Contractor for completion of the Work in accordance with the terms of the Contract.

1.15 *Contract Time* means the period between the start date identified in the Notice to Proceed with construction and the Substantial Completion date identified in the Notice to Proceed or as subsequently amended by a Change Order.

1.16 *Contractor* means the individual, corporation, limited liability company, partnership, firm, or other entity contracted to perform the Work, regardless of the type of construction contract used, so that the term as used herein includes a Construction Manager-at-Risk or a Design-Build firm as well as a general or prime Contractor. The Contract Documents refer to Contractor as if singular in number.

1.17 *Construction Documents* mean the Drawings, Specifications, and other documents issued to build the Project. Construction Documents become part of the Contract Documents when listed in the Contract or any Change Order.

1.18 *Construction Manager-at-Risk*, in accordance with Tex. Gov't Code, Ch. 2166, means a sole proprietorship, partnership, corporation, or other legal entity that assumes the risk for construction, rehabilitation, alteration, or repair of a facility at the contracted price as a general contractor and provides consultation to Owner regarding construction during and after the design of the facility.

1.19 *Date of Commencement* means the date designated in the Notice to Proceed for Contractor to commence the Work.

1.20 *Day* means a calendar day unless otherwise specifically stipulated.

1.21 *Design-Build* means a project delivery method in which the detailed design and subsequent construction is provided through a single contract with a Design-Build firm; a team, partnership, or legal entity that includes design professionals and a builder. The Design-Build Project delivery shall be implemented in accordance with Tex. Gov't Code § 2166.2531.

1.22 *Drawings* mean that product of A/E which graphically depicts the Work.

1.23 *Final Completion* means the date determined and certified by A/E and Owner on which the Work is fully and satisfactorily complete in accordance with the Contract.

1.24 *Final Payment* means the last and final monetary compensation made to Contractor for any portion of the Work that has been completed and accepted for which payment has not been made, amounts owing to adjustments to the final Contract Sum resulting from approved change orders, and release of Contractor's retainage.

1.25 *Historically Underutilized Business (HUB)* pursuant to Tex. Gov't Code, Ch. 2161, means a business that is at least 51% owned by an Asian Pacific American, a Black American, a Hispanic American, a Native American and/or an American Woman; is an entity with its principal place of business in Texas; and has an owner residing in Texas with proportionate interest that actively participates in the control, operations, and management of the entity's affairs.

1.26 *Notice to Proceed* means written document informing Contractor of the dates beginning Work and the dates anticipated for Substantial Completion.

1.27 *Open Item List* means a list of work activities, Punchlist items, changes or other issues that are not expected by Owner and Contractor to be complete prior to Substantial Completion.

1.28 *Owner* means the State of Texas, and any agency of the State of Texas, acting through the responsible entity of the State of Texas identified in the Contract as Owner.

1.29 *Owner's Designated Representative (ODR)* means the individual assigned by Owner to act on its behalf and to undertake certain activities as specifically outlined in the Contract. ODR is the only party authorized to direct changes to the scope, cost, or time of the Contract.

1.30 *Project* means all activities necessary for realization of the Work. This includes design,

contract award(s), execution of the Work itself, and fulfillment of all Contract and warranty obligations.

1.31 *Progress Assessment Report (PAR)* means the monthly compliance report to Owner verifying compliance with the HUB subcontracting plan (HSP).

1.32 *Proposed Change Order (PCO)* means a document that informs Contractor of a proposed change in the Work and appropriately describes or otherwise documents such change including Contractor's response of pricing for the proposed change.

1.33 *Punchlist* means a list of items of Work to be completed or corrected by Contractor after Substantial Completion. Punchlists indicate items to be finished, remaining Work to be performed, or Work that does not meet quality or quantity requirements as required in the Contract Documents.

1.34 *Record Documents* mean the drawing set, Specifications, and other materials maintained by Contractor that documents all addenda, Architect's Supplemental Instructions, Change Orders and postings and markings that record the as-constructed conditions of the Work and all changes made during construction.

1.35 *Request for Information (RFI)* means a written request by Contractor directed to A/E or ODR for a clarification of the information provided in the Contract Documents or for direction concerning information necessary to perform the Work that may be omitted from the Contract Documents.

1.36 *Samples* mean representative physical examples of materials, equipment, or workmanship used to confirm compliance with requirements and/or to establish standards for use in execution of the Work.

1.37 *Schedule of Values* means the detailed breakdown of the cost of the materials, labor, and equipment necessary to accomplish the Work as described in the Contract Documents, submitted by Contractor for approval by Owner and A/E.

1.38 *Shop Drawings* mean the drawings, diagrams, illustrations, schedules, performance charts, brochures, and other data prepared by Contractor or its agents which detail a portion of the Work.

1.39 *Site* means the geographical area of the location of the Work.

1.40 *Special Conditions* mean the documents containing terms and conditions which may be unique to the Project. Special Conditions are a part of the Contract Documents and have precedence over the Uniform General Conditions and Supplementary General Conditions.

1.41 *Specifications* mean the written product of A/E that establishes the quality and/or performance of products utilized in the Work and processes to be used, including testing and verification for producing the Work.

1.42 *Subcontractor* means a business entity that enters into an agreement with Contractor to

perform part of the Work or to provide services, materials, or equipment for use in the Work.

1.43 *Submittal Register* means a list provided by Contractor of all items to be furnished for review and approval by A/E and Owner and as identified in the Contract Documents including anticipated sequence and submittal dates.

1.44 *Substantial Completion* means the date determined and certified by Contractor, A/E, and Owner when the Work, or a designated portion thereof, is sufficiently complete, in accordance with the Contract, so as to be operational and fit for the use intended.

1.45 *Supplementary General Conditions* mean procedures and requirements that modify the Uniform General Conditions. Supplementary General Conditions, when used, have precedence over the Uniform General Conditions.

1.46 *Unit Price Work* means the Work, or a portion of the Work, paid for based on incremental units of measurement.

1.47 *Unilateral Change Order (ULCO)* means a Change Order issued by Owner without the complete agreement of Contractor, as to cost and/or time.

1.48 *Work* means the administration, procurement, materials, equipment, construction and all services necessary for Contractor, and/or its agents, to fulfill Contractor's obligations under the Contract.

1.49 *Work Progress Schedule* means the continually updated time schedule prepared and monitored by Contractor that accurately indicates all necessary appropriate revisions as required by the conditions of the Work and the Project while maintaining a concise comparison to the Baseline Schedule.

Article 2. Wage Rates and Other Laws Governing Construction

2.1 Environmental Regulations. Contractor shall conduct activities in compliance with applicable laws and regulations and other requirements of the Contract relating to the environment and its protection at all times. Unless otherwise specifically determined, Owner is responsible for obtaining and maintaining permits related to stormwater run-off. Contractor shall conduct operations consistent with stormwater run-off permit conditions. Contractor is responsible for all items it brings to the Site, including hazardous materials, and all such items brought to the Site by its Subcontractors and suppliers, or by other entities subject to direction of Contractor. Contractor shall not incorporate hazardous materials into the Work without prior approval of Owner, and shall provide an affidavit attesting to such in association with request for Substantial Completion inspection. Contractor shall not incorporate hazardous or environmentally regulated materials into the Work including, but not limited to, asbestos, lead paint, transformers with any amount of pcb's, mercury ballasts, etc. without prior approval of the Owner, and shall provide an affidavit attesting to such in association with request for Substantial Completion inspection.

2.2 Wage Rates. Contractor shall not pay less than the wage scale of the various classes of labor as shown on the prevailing wage schedule provided by Owner in the bid or proposal specifications. The specified wage rates are minimum rates only. Owner is not bound to pay any claims for additional compensation made by any Contractor because the Contractor pays wages in excess of the applicable minimum rate contained in the Contract. The prevailing wage schedule is not a representation that qualified labor adequate to perform the Work is available locally at the prevailing wage rates.

2.2.1 Notification to Workers. Contractor shall post the prevailing wage schedule in a place conspicuous to all workers on the Project Site When requested by Owner, Contractor shall furnish evidence of compliance with the Texas Prevailing Wage Law and the addresses of all workers.

2.2.1.1 Pursuant to Tex. Gov't Code § 2258.024, Contractor shall keep, on site, true and accurate records showing the name and occupation of each worker employed by the Contractor or subcontractors and the actual per diem wages paid to each worker. The record shall be open to inspection by the ODR and their agents at all reasonable hours for the duration of the contract.

2.2.1.2 With each application for progress payment, Contractor shall make available upon request certified payroll records, including from subcontractors of any tier level, on Form WH-347 as promulgated by the U.S. Department of Labor, as may be revised from time to time and in unlocked and unprotected Excel format, along with copies of any and all Contract Documents between Contractor and any Subcontractors. Pursuant to Tex. Penal Code §§ 37.02 and 37.10, Employees of Contractor and subcontractors, including all tier levels, shall be subject to prosecution for submitting certified payroll records that contain materially false information.

2.2.1.3 The prevailing wage schedule is determined by Owner in compliance with Tex. Gov't Code, Ch. 2258. Should Contractor at any time become aware that a particular skill or trade not reflected on Owner's prevailing wage schedule will be or is being employed in the Work, whether by Contractor or by Subcontractor, Contractor shall promptly inform ODR of the proposed wage to be paid for the skill along with a justification for same and ODR shall promptly concur with or reject the proposed wage and classification.

2.2.1.4 Contractor is responsible for determining the most appropriate wage for a particular skill in relation to similar skills or trades identified on the prevailing wage schedule. In no case, shall any worker be paid less than the wage indicated for laborers.

2.2.1.5 Pursuant to Tex. Labor Code § 214.008, Misclassification of Workers; Penalty. The Owner requires Contractor and all subcontractors properly classify individuals as Employees or Independent Contractors.

2.2.2 Penalty for Violation. Contractor, and any Subcontractor, will pay to the State a penalty of sixty dollars ($60) for each worker employed for each day, or portion thereof, that the worker is paid less than the wage rates stipulated in the prevailing wage schedule

2.2.3 Complaints of Violations.

2.2.3.1 Owner's Determination of Good Cause. Upon receipt of information concerning a violation, Owner will conduct an investigation in accordance with Tex. Gov't Code, Ch. 2258 and make an initial determination as to whether good cause exists that a violation occurred. Upon making a good cause finding, Owner will retain the full amounts claimed by the claimant or claimants as the difference between wages paid and wages due under the prevailing wage schedule and any supplements thereto, together with the applicable penalties in accordance with Tex. Gov't Code § 2258.023, such amounts being subtracted from successive progress payments pending a final decision on the violation.

2.2.3.2 No Extension of Time. If Owner's determination proves valid that good cause existed to believe a violation had occurred, Contractor is not entitled to an extension of time for any delay arising directly or indirectly from the arbitration procedures.

2.2.3.3 Cooperation with Owner's Investigation. Contractor shall cooperate with Owner during any investigations hereunder. Such cooperation shall include, but not necessarily be limited to, timely providing the information and/or documentation requested by Owner, which may include certified payroll records on Form WH-347 as promulgated by the U.S. Department of Labor, as may be revised from time to time and in unlocked and unprotected Excel format; and copies of any and all Contract Documents between Contractor and any Subcontractors.

2.2.3.4 Notification to Owner. In the event Contractor or Subcontractor elect to appeal an initial determination made pursuant to Paragraph 2.2.3.1, the Contractor and/or Subcontractor, as applicable, shall deliver notice thereof to Owner.

2.3 Venue for Suits. The venue for any suit arising from the Contract will be in a court of competent jurisdiction in Nacogdoches County, Texas.

2.4 Licensing of Trades. Contractor shall comply with all applicable provisions of State law related to license requirements for skilled tradesmen, contractors, suppliers and or laborers, as necessary to accomplish the Work. In the event Contractor, or one of its Subcontractors, loses its license during the term of performance of the Contract, Contractor shall promptly hire or contract with a licensed provider of the service at no additional cost to Owner.

2.5 Royalties, Patents, and Copyrights. Contractor shall pay all royalties and license fees, defend suits or claims for infringement of copyrights and patent rights, and shall hold Owner harmless from loss on account thereof, but shall not be responsible for such defense or loss when a particular design, process or product of a particular manufacturer or manufacturers is required by the Contract Documents, or where the copyright violations are contained in Drawings, Specifications or other documents prepared by Owner or A/E. However, if Contractor has reason to believe that the required design, process, or product is an infringement of a copyright or a patent, Contractor shall be responsible for such loss unless such information is promptly furnished to A/E.

2.6 State Sales and Use Taxes. Owner qualifies for exemption from certain State and local sales and use taxes pursuant to the provisions of Tex. Tax Code, Ch. 151. Upon request from Contractor, Owner shall furnish evidence of tax exempt status. Contractor may claim exemption from payment of certain applicable State taxes by complying with such procedures as prescribed by the State Comptroller of Public Accounts. Owner acknowledges not all items qualify for exemption. Owner is not obligated to reimburse Contractor for taxes paid on items that qualify for tax exemption.

2.7 Buy America Requirements for Iron and Steel Used in Construction. In accordance with Texas Government Code Section 2252.202, all iron or steel products (i.e. rolled structural shapes including wide flange beams and columns, angles, bars, plates, sheets, hollow structural sections, pipe, etc.) shall be produced, manufacturer and fabricated in the United States.

Article 3. General Responsibilities of Owner and Contractor

3.1 Owner's General Responsibilities. Owner is the entity identified as such in the Contract and referred to throughout the Contract Documents as if singular in number.

3.1.1 Preconstruction Conference. Prior to, or concurrent with, the issuance of Notice to Proceed with construction, a conference will be convened for attendance by Owner, Contractor, A/E and appropriate Subcontractors. The purpose of the conference is to establish a working understanding among the parties as to the Work, the operational conditions at the Project Site, and general administration of the Project. Topics include communications, schedules, procedures for handling Shop Drawings and other submittals, processing Applications for Payment, maintaining required records and all other matters of importance to the administration of the Project and effective communications between the Project team members.

3.1.2 Owner's Designated Representative. Prior to the start of construction, Owner will identify Owner's Designated Representative (ODR), who has the express authority to act and bind Owner to the extent and for the purposes described in the various Articles of the Contract, including responsibilities for general administration of the Contract.

3.1.2.1 Unless otherwise specifically defined elsewhere in the Contract

Documents, ODR is the single point of contact between Owner and Contractor. Notice to ODR, unless otherwise noted, constitutes notice to Owner under the Contract.

3.1.2.2 All directives on behalf of Owner will be conveyed to Contractor and A/E by ODR in writing.

3.1.2.3 Owner will furnish or cause to be furnished, free of charge, the number of complete sets of the Drawings, Specifications, and addenda as provided in the Supplementary General Conditions or Special Conditions.

3.1.2.4 Owner's HUB Coordinator shall be Owner's Representative and sole point of contact regarding approval of the Contractor's good faith effort related to the original HUB Subcontracting Plan and subsequent changes.

3.1.2.5 The ODR will establish the protocol for planning, scheduling and documenting progress meetings with provisions for absence of various project team members that have a key role in these duties.

3.1.3 Owner Supplied Materials and Information.

3.1.3.1 Owner will furnish to Contractor those surveys describing the physical characteristics, legal description, limitations of the Site, Site utility locations, and other information used in the preparation of the Contract Documents.

3.1.3.2 Owner will provide information, equipment, or services under Owner's control to Contractor with reasonable promptness.

3.1.4 Availability of Lands. Owner will furnish, as indicated in the Contract, all required rights to use the lands upon which the Work occurs. This includes rights-of-way and easements for access and such other lands that are designated for use by Contractor. Contractor shall comply with all Owner identified encumbrances or restrictions specifically related to use of lands so furnished. Owner will obtain and pay for easements for permanent structures or permanent changes in existing facilities,

3.1.5 Limitation on Owner's Duties.

3.1.5.1 Owner will not supervise, direct, control or have authority over or be responsible for Contractor's means, methods, technologies, sequences or procedures of construction or the safety precautions and programs incident thereto. Owner is not responsible for any failure of Contractor to comply with laws and regulations applicable to the Work. Owner is not responsible for the failure of Contractor to perform or furnish the Work in accordance with the Contract Documents. Except as provided in Section 2.5, Owner is not

responsible for the acts or omissions of Contractor, or any of its Subcontractors, suppliers or of any other person or organization performing or furnishing any of the Work on behalf of Contractor.

3.1.5.2 Owner will not take any action in contravention of a design decision made by A/E in preparation of the Contract Documents, when such actions are in conflict with statutes under which A/E is licensed for the protection of the public health and safety.

3.2 Role of Architect/Engineer. Unless specified otherwise in the Contract between Owner and Contractor, A/E shall provide general administration services for Owner during the construction phase of the project. Written correspondence, requests for information, and Shop Drawings/submittals shall be directed to A/E for action. A/E has the authority to act on behalf of Owner to the extent provided in the Contract Documents, unless otherwise modified by written instrument, which will be furnished to Contractor by ODR, upon request.

3.2.1 Site Visits.

3.2.1.1 A/E will make visits to the Site at intervals as provided in the A/E's Contract with Owner, to observe the progress and the quality of the various aspects of Contractor's executed Work and report findings to Owner.

3.2.1.2 A/E has the authority to interpret Contract Documents and inspect the Work for compliance and conformance with the Contract. Except as referenced in Paragraph 3.1.5.2, Owner retains the sole authority to accept or reject Work and issue direction for correction, removal, or replacement of Work.

3.2.2 Clarifications and Interpretations. It may be determined that clarifications or interpretations of the Contract Documents are necessary. Upon direction by ODR, such clarifications or interpretations will be provided by A/E consistent with the intent of the Contract Documents. A/E will issue these clarifications with reasonable promptness to Contractor as A/E's supplemental instruction ("ASI") or similar instrument. If Contractor believes that such clarification or interpretation justifies an adjustment in the Contract Sum or the Contract Time, Contractor shall so notify Owner in accordance with the provisions of Article 11.

3.2.3 Limitations on Architect/Engineer Authority. A/E is not responsible for:

3.2.3.1 Contractor's means, methods, techniques, sequences, procedures, safety, or programs incident to the Project, nor will A/E supervise, direct, control or have authority over the same;

3.2.3.2 The failure of Contractor to comply with laws and regulations applicable to the furnishing or performing the Work;

3.2.3.3 Contractor's failure to perform or furnish the Work in accordance with the Contract Documents; or

3.2.3.4 Acts or omissions of Contractor, or of any other person or organization performing or furnishing any of the Work.

3.2.4 Progress Meetings and Minutes. A/E shall prepare the agenda and conduct meetings with Owner and Contractor to discuss such matters as procedures, progress, coordination, scheduling, and status of the Work on a regular basis as determined by Owner. Contractor shall cooperate with A/E whose responsibility is the preparation of meeting minutes for distribution to Contractor and Owner. In the absence of A/E at such meetings, Contractor shall be responsible for preparing and distributing minutes to Owner and A/E. If, in the opinion of Owner, it is feasible for A/E to conduct the meeting via telecommunication, A/E shall conduct the meeting and prepare and distribute the minutes to Owner and Contractor. A/E shall solicit input for the meeting agenda from Contractor and Owner a minimum of forty-eight (48) hours before a meeting and distribute the agenda a minimum of thirty-six (36) hours before a meeting and distribute the minutes, reports, and other similar documentation within one week of the respective work or event, unless directed otherwise by Owner

3.3 Contractor's General Responsibilities. Contractor is solely responsible for implementing the Work in full compliance with all applicable laws and the Contract Documents and shall supervise and direct the Work using the best skill and attention to assure that each element of the Work conforms to the Contract requirements. Contractor is solely responsible for all construction means, methods, techniques, safety, sequences, coordination, procedures and protection of the installed work as part of the contract until substantial completion of the project. Contractor remains responsible for the care and protection of materials and Work in the areas where punch list items are completed until Final Completion.

3.3.1 Project Administration. Contractor shall provide Project administration for all Subcontractors, vendors, suppliers, and others involved in implementing the Work and shall coordinate administration efforts with those of A/E and ODR in accordance with these general conditions and other provisions of the Contract, and as outlined in the preconstruction conference. Contractor's Project Administration includes periodic daily reporting on weather, work progress, labor, materials, equipment, obstructions to prosecution of the work, accidents and injuries in accordance with the Contract and transmitted no less frequently than on a weekly basis.

3.3.2 Contractor's Management Personnel. Contractor shall employ a competent person or persons who will be present at the Project Site during the progress of the Work to supervise or oversee the work. The competent persons are subject to the approval of ODR. Contractor shall not change approved staff during the course of the project without the written approval of ODR unless the staff member leaves the employment of Contractor. Contractor shall provide additional quality control, safety and other staff as stated in the Supplementary

General Conditions.

3.3.3 Quality Control. Contractor shall implement its existing quality control and safety plan for the Project, and shall use such standard of care as a contractor of ordinary prudence would exercise in the same or similar circumstances.

3.3.4 Labor. Contractor shall provide competent, suitably qualified personnel to survey, lay-out, and construct the Work as required by the Contract Documents and maintain good discipline and order at the Site at all times.

3.3.5 Services, Materials, and Equipment. Unless otherwise specified, Contractor shall provide and assume full responsibility for all services, materials, equipment, labor, transportation, construction equipment and machinery, tools, appliances, fuel, power, light, heat, telephone, water, sanitary facilities, temporary facilities, and all other facilities, incidentals, and services necessary for the construction, performance, testing, start-up, inspection and completion of the Work.

3.3.6 Contractor General Responsibility. For Owner furnished equipment or material that will be in the care, custody, and control of Contractor, Contractor is responsible for damage or loss. Owner shall deliver to Contractor a complete list and respective values of such materials or equipment and make an equitable adjustment to the contract amount for any increase in cost of Builder's Risk insurance.

3.3.7 Non-Compliant Work. Should A/E and/or ODR identify Work as non-compliant with the Contract Documents, A/E and/or ODR shall communicate the finding to Contractor, and Contractor shall correct such Work at no additional cost to the Owner. The approval of Work by either A/E or ODR does not relieve Contractor from the obligation to comply with all requirements of the Contract Documents.

3.3.8 Subcontractors. Contractor shall not employ any Subcontractor, supplier or other person or organization, whether initially or as a substitute, against whom Owner shall have reasonable objection. Owner will communicate such objections in writing within ten (10) days of receipt of Contractor's intent to use such Subcontractor, supplier, or other person or organization. Contractor is not required to employ any Subcontractor, supplier or other person or organization to furnish any of the work to whom Contractor has reasonable objection. Contractor shall not substitute Subcontractors without the acceptance of Owner. Pursuant to Tex. Gov't Code § 2269.256(b), if the Contractor reviews, evaluates and recommends that the Owner accept a bid or proposal from a Subcontractor but the Owner requires another bid or proposal to be accepted, Owner shall compensate the Contractor by a change in price, time or guaranteed maximum cost for any additional cost or risk the Contractor will incur because of Owner's requirement to select another bid or proposal rather than the one recommended.

3.3.8.1 All Subcontracts and supply contracts shall be consistent with and bind the Subcontractors and suppliers to the terms and conditions of

the Contract Documents including provisions of the Contract between Contractor and Owner.

3.3.8.2 Contractor shall be solely responsible for scheduling and coordinating the Work of Subcontractors, suppliers and other persons and organizations performing or furnishing any of the Work under a direct or indirect contract with Contractor. Require all Subcontractors, suppliers and such other persons and organizations performing or furnishing any of the Work to communicate with Owner only through Contractor. Contractor shall furnish to Owner a copy, at Owner's request, of each first-tier subcontract promptly after its execution. Contractor agrees that Owner has no obligation to review or approve the content of such contracts and that providing Owner such copies in no way relieves Contractor of any of the terms and conditions of the Contract, including, without limitation, any provisions of the Contract which require the Subcontractor to be bound to Contractor in the same manner in which Contractor is bound to Owner.

3.3.9 Continuing the Work. Contractor shall carry on the Work and adhere to the progress schedule during all disputes, disagreements, or alternative resolution processes with Owner. Contractor shall not delay or postpone any Work because of pending unresolved disputes, disagreements or alternative resolution processes, except as Owner and Contractor may agree in writing.

3.3.10 Cleaning. Contractor shall at all times, keep the Site and the Work clean and free from accumulation of waste materials or rubbish caused by the construction activities under the Contract. Contractor shall ensure that the entire Project is thoroughly cleaned prior to requesting Substantial Completion inspection and, again, upon completion of the Project prior to the final inspection.

3.3.11 Acts and Omissions of Contractor, its Subcontractors, and Employees. Contractor shall be responsible for acts and omissions of his employees and all its Subcontractors, their agents and employees. Owner may, in writing, require Contractor to remove from the Project any of Contractor's or its Subcontractor's employees whom ODR finds to be careless, incompetent, unsafe, uncooperative, disruptive, or otherwise objectionable.

3.3.12 Acts or Omissions. Contractor shall indemnify and hold harmless the State of Texas and Customers, AND/OR THEIR OFFICERS, AGENTS, EMPLOYEES, REPRESENTATIVES, CONTRACTORS, ASSIGNEES, AND/OR DESIGNEES FROM ANY AND ALL LIABILITY, ACTIONS, CLAIMS, DEMANDS, OR SUITS, AND ALL RELATED COSTS, ATTORNEY FEES, AND EXPENSES arising out of, or resulting from any acts or omissions of Contractor or its agents, employees, subcontractors, Order Fulfillers, or suppliers of subcontractors in the execution or performance of the Contract and any Purchase Orders issued under the Contract. THE DEFENSE SHALL BE COORDINATED BY CONTRACTOR WITH THE OFFICE OF THE ATTORNEY GENERAL WHEN TEXAS STATE AGENCIES ARE NAMED DEFENDANTS IN ANY LAWSUIT AND CONTRACTOR MAY

NOT AGREE TO ANY SETTLEMENT WITHOUT FIRST OBTAINING THE CONCURRENCE FROM THE OFFICE OF THE ATTORNEY GENERAL. CONTRACTOR AND OWNER AGREE TO FURNISH TIMELY WRITTEN NOTICE TO EACH OTHER OF ANY SUCH CLAIM.

3.3.13 Infringements.

3.3.13.1 Contractor shall indemnify and hold harmless the State of Texas and Customers, AND/OR THEIR EMPLOYEES, AGENTS, REPRESENTATIVES, CONTRACTORS, ASSIGNEES, AND/OR DESIGNEES from any and all third party claims involving infringement of United States patents, copyrights, trade and service marks, and any other intellectual or intangible property rights in connection with the PERFORMANCES OR ACTIONS OF CONTRACTOR PURSUANT TO THIS CONTRACT. CONTRACTOR AND THE CUSTOMER AGREE TO FURNISH TIMELY WRITTEN NOTICE TO EACH OTHER OF ANY SUCH CLAIM. CONTRACTOR SHALL BE LIABLE TO PAY ALL COSTS OF DEFENSE INCLUDING ATTORNEYS' FEES. THE DEFENSE SHALL BE COORDINATED BY CONTRACTOR WITH THE OFFICE OF THE ATTORNEY GENERAL WHEN TEXAS STATE AGENCIES ARE NAMED DEFENDANTS IN ANY LAWSUIT AND CONTRACTOR MAY NOT AGREE TO ANY SETTLEMENT WITHOUT FIRST OBTAINING THE CONCURRENCE FROM THE OFFICE OF THE ATTORNEY GENERAL.

3.3.13.2 Contractor shall have no liability under this section if the alleged infringement is caused in whole or in part by: (i) use of the product or service for a purpose or in a manner for which the product or service was not designed, (ii) any modification made to the product without Contractor's written approval, (iii) any modifications made to the product by Contractor pursuant to Customer's specific instructions, (iv) any intellectual property right owned by or licensed to Customer, or (v) any use of the product or service by Customer that is not in conformity with the terms of any applicable license agreement.

3.3.13.3 If Contractor becomes aware of an actual or potential claim, or Customer provides Contractor with notice of an actual or potential claim, Contractor may (or in the case of an injunction against Customer, shall), at Contractor's sole option and expense; (i) procure for the Customer the right to continue to use the affected portion of the product or service, or (ii) modify or replace the affected portion of the product or service with functionally equivalent or superior product or service so that Customer's use is non-infringing.

3.3.13.4 Taxes/Workers' Compensation/Unemployment Insurance–Including Indemnity.

3.3.12.4.1 CONTRACTOR AGREES AND ACKNOWLEDGES THAT DURING THE EXISTENCE OF THIS CONTRACT, CONTRACTOR SHALL BE ENTIRELY RESPONSIBLE FOR THE LIABILITY AND PAYMENT OF CONTRACTOR'S AND CONTRACTOR'S EMPLOYEES' TAXES OF WHATEVER KIND, ARISING OUT OF THE PERFORMANCES IN THIS CONTRACT. CONTRACTOR AGREES TO COMPLY WITH ALL STATE AND FEDERAL LAWS APPLICABLE TO ANY SUCH PERSONS, INCLUDING LAWS REGARDING WAGES, TAXES, INSURANCE, AND WORKERS' COMPENSATION. THE CUSTOMER AND/OR THE STATE SHALL NOT BE LIABLE TO CONTRACTOR, ITS EMPLOYEES, AGENTS, OR OTHERS FOR THE PAYMENT OF TAXES OR THE PROVISION OF UNEMPLOYMENT INSURANCE AND/OR WORKERS' COMPENSATION OR ANY BENEFIT AVAILABLE TO A STATE EMPLOYEE OR EMPLOYEE OF ANOTHER GOVERNMENTAL ENTITY CUSTOMER.

3.3.12.4.1 CONTRACTOR AGREES TO INDEMNIFY AND HOLD HARMLESS OWNER, THE STATE OF TEXAS AND/OR THEIR EMPLOYEES, AGENTS, REPRESENTATIVES, CONTRACTORS, AND/OR ASSIGNEES FROM ANY AND ALL LIABILITY, ACTIONS, CLAIMS, DEMANDS, OR SUITS, AND ALL RELATED COSTS, ATTORNEYS' FEES, AND EXPENSES, RELATING TO TAX LIABILITY, UNEMPLOYMENT INSURANCE AND/OR WORKERS' COMPENSATION IN ITS PERFORMANCE UNDER THIS CONTRACT. CONTRACTOR SHALL BE LIABLE TO PAY ALL COSTS OF DEFENSE INCLUDING ATTORNEYS' FEES. THE DEFENSE SHALL BE COORDINATED BY CONTRACTOR WITH THE OFFICE OF THE ATTORNEY GENERAL WHEN TEXAS STATE AGENCIES ARE NAMED DEFENDANTS IN ANY LAWSUIT AND VENDOR MAY NOT AGREE TO ANY SETTLEMENT WITHOUT FIRST OBTAINING THE CONCURRENCE FROM THE OFFICE OF THE ATTORNEY GENERAL. CONTRACTOR AND OWNER AGREE TO FURNISH TIMELY WRITTEN NOTICE TO EACH OTHER OF ANY SUCH CLAIM.

3.3.13.5 The provisions of this indemnification are solely for the benefit of the parties hereto and not intended to create or grant any rights, contractual or otherwise, to any other person or entity.

3.3.13.6 Contractor shall promptly advise Owner in writing of any claim or

demand against Owner or against Contractor which involves Owner and known to Contractor and related to or arising out of Contractor's activities under this Contract.

3.3.14 Ancillary Areas. Operate and maintain operations and associated storage areas at the site of the Work in accordance with the following:

3.3.14.1 Confine all Contractor operations, including storage of materials and employee parking upon the Site of Work, to areas designated by Owner.

3.3.14.2 Contractor may erect, at its own expense, temporary buildings that will remain its property. Remove such buildings and associated utility service lines upon completion of the Work, unless Contractor requests and Owner provides written consent that it may abandon such buildings and utilities in place.

3.3.14.3 Use only established roadways or construct and use such temporary roadways as may be authorized by Owner. Do not allow load limits of vehicles to exceed the limits prescribed by appropriate regulations or law. Provide protection to road surfaces, curbs, sidewalks, trees, shrubbery, sprinkler systems, drainage structures and other like existing improvements to prevent damage and repair any damage thereto at the expense of Contractor.

3.3.14.4 Owner may restrict Contractor's entry to the Site to specifically assigned entrances and routes.

3.3.15 Separate Contracts. Owner reserves the right to award other contracts in connection with other portions of the Project under these same or substantially similar contract conditions, including those portions related to insurance and waiver of subrogation. Owner reserves the right to perform operations related to the Project with Owner's own forces.

3.3.16 Under a system of separate contracts, the conditions described herein continue to apply except as may be amended by change order.

3.3.17 Contractor shall cooperate with other contractors or forces employed on the Project by Owner, including providing access to Site and Project information as requested.

3.3.18 Owner shall be reimbursed by Contractor for costs incurred by Owner which are payable to a separate contractor because of delays, improperly timed activities, or defective construction by Contractor. Owner will equitably adjust the Contract by Change Order for costs incurred by Contractor because of delays, improperly timed activities, and damage to the Work or defective construction by a separate contractor.

Article 4. Historically Underutilized Business (HUB) Subcontracting Plan

4.1 General Description. The purpose of the Historically Underutilized Business (HUB) program is to promote equal business opportunities for economically disadvantaged persons (as defined by Tex. Gov't Code, Ch. 2161) to contract with the State of Texas in accordance with the goals specified in the State of Texas Disparity Study. The HUB program annual procurement utilization goals are defined in 34 T.A.C. §20.13(b).

4.1.1 State agencies are required by statute to make a good faith effort to assist HUBs in participating in contract awards issued by the State. 34 T.A.C. §20.13(b) outlines the State's policy to encourage the utilization of HUBs in State contracting opportunities through race, ethnic and gender neutral means.

4.1.2 A Contractor who contracts with the State in an amount of $100,000 or greater is required to make a good faith effort to award subcontracts to HUBs in accordance with 34 T.A.C. §20.14(a)(2)(A) by submitting a HUB subcontracting plan within twenty-four (24) hours after the bid or response is due and complying with the HUB subcontracting plan after it is accepted by Owner and during the term of the Contract.

4.2 Compliance with Approved HUB Subcontracting Plan. Contractor, having been awarded this Contract in part by complying with the HUB program statute and rules, hereby covenants to continue to comply with the HUB program as follows:

4.2.1 Prior to adding or substituting a Subcontractor, promptly notify Owner in the event a change is required for any reason to the accepted HUB subcontracting plan.

4.2.2 Conduct the good-faith effort activities required and provide Owner with necessary documentation to justify approval of a change to the approved HUB subcontracting plan.

4.2.3 Cooperate in the execution of a Change Order or such other approval of the change in the HUB subcontracting plans as Contractor and Owner may agree to.

4.2.4 Maintain and make available to Owner upon request business records documenting compliance with the accepted HUB subcontracting plan.

4.2.5 Upon receipt of payment for performance of Work, submit to Owner a compliance report, in the format required by Owner that demonstrates Contractor's performance of the HUB subcontracting plan.

4.2.5.1 Progress Assessment Report (PAR): monthly compliance reports to Owner (contracting agency), verifying their compliance with the HUB subcontracting plan, including the use/expenditures they have made to Subcontractors. (The PAR is available in the Index Forms Library on the Facilities Design & Construction page of the Texas Facilities

Commission website.

4.2.6 Promptly and accurately explain and provide supplemental information to Owner to assist in Owner's investigation of Contractor's good-faith effort to fulfill the HUB subcontracting plan and the requirements under 34 T.A.C. § 20.14(a)(1).

4.3 Failure to Demonstrate Good-Faith Effort. Upon a determination by Owner that Contractor has failed to demonstrate a good-faith effort to fulfill the HUB subcontracting plan or any Contract covenant detailed above, Owner may, in addition to all other remedies available to it, report the failure to perform to the Comptroller of Public Accounts, Texas Procurement and Support Services Division, Historically Underutilized Business Program and may bar Contractor from future contracting opportunities with Owner.

Article 5. Bonds and Insurance

5.1 Construction Bonds. Contractor is required to tender to Owner, prior to commencing the Work, performance and payment bonds, as required by Tex. Gov't Code, Ch. 2253. On Construction Manager-at-Risk and Design-Build Projects the Owner shall require a security bond, as described in Subsection 5.1.2 below.

5.1.1 Bond Requirements. Each bond shall be executed by a corporate surety or sureties authorized to do business in the State of Texas and acceptable to Owner, on Owner's form, and in compliance with the relevant provisions of the Texas Insurance Code. If any bond is for more than ten (10) percent of the surety's capital and surplus, Owner may require certification that the company has reinsured the excess portion with one or more reinsurers authorized to do business in the State. A reinsurer may not reinsure for more than ten (10) percent of its capital and surplus. If a surety upon a bond loses its authority to do business in the State, Contractor shall, within thirty (30) days after such loss, furnish a replacement bond at no added cost to Owner.

5.1.1.1 A Performance bond is required if the Contract Sum is in excess of $100,000. The performance bond is solely for the protection of Owner. Except for Construction Manager-at-Risk Contracts, where, in Owner's sole discretion and determination, a Performance Bond is acceptable in the amount guaranteed maximum price (GMP), the performance bond is to be for the Contract Sum to guarantee the faithful performance of the Work in accordance with the Contract Documents. The form of the bond shall be approved by the Office of the Attorney General of Texas. The performance bond shall be effective through Contractor's warranty period.

5.1.1.2 A Payment bond is required if the Contract price is in excess of $25,000. Except for Construction Manager-at-Risk Contracts where, in Owner's sole discretion and determination, a Payment Bond is acceptable in the amount of the guaranteed maximum price (GMP).

The payment bond is to be for the Contract Sum and is payable to Owner solely for the protection and use of payment bond beneficiaries. The form of the bond shall be approved by the Office of the Attorney General of Texas.

5.1.2 Security Bond. The security bond provides protection to Owner if Contractor presents an acceptable guaranteed maximum price ("GMP") to Owner and 1) fails to execute the GMP; or 2) fails to deliver the required payment and performance bonds within the time period stated below.

5.1.3 When Bonds Are Due.

5.1.3.1 Security bonds are due within ten (10) days of signing a Construction Manager-at-Risk or Design-Build Contract.

5.1.3.2 Payment and performance bonds are due within ten (10) days of Contractor's receipt of a fully executed GMP on a Construction Manager-at-Risk project or the Contract Sum for a Design-Build project, or within ten (10) days of Contractor's receipt of a fully executed Contract on competitively bid or competitive sealed proposal projects.

5.1.4 Power of Attorney. Each bond shall be accompanied by a valid power of attorney (issued by the surety company and attached, signed and sealed with the corporate embossed seal, to the bond) authorizing the attorney-in-fact who signs the bond to commit the company to the terms of the bond, and stating any limit in the amount for which the attorney can issue a single bond.

5.1.5 Bond Indemnification. The process of requiring and accepting bonds and making claims there under shall be conducted in compliance with Tex. Gov't Code, Ch. 2253. IF FOR ANY REASON A STATUTORY PAYMENT OR PERFORMANCE BOND IS NOT HONORED BY THE SURETY, CONTRACTOR SHALL FULLY INDEMNIFY AND HOLD OWNER HARMLESS OF AND FROM ANY COSTS, LOSSES, OBLIGATIONS OR LIABILITIES IT INCURS AS A RESULT.

5.1.6 Furnishing Bond Information. Owner shall furnish certified copies of the payment bond and the related Contract to any qualified person seeking copies who complies with Tex. Gov't Code § 2253.026.

5.1.7 Claims on Payment Bonds. Claims on payment bonds must be sent directly to Contractor and his surety in accordance with Tex. Gov't Code § 2253.041. All payment bond claimants are cautioned that no lien exists on the funds unpaid to Contractor on such Contract, and that reliance on notices sent to Owner may result in loss of their rights against Contractor and/or his surety. Owner is not responsible in any manner to a claimant for collection of unpaid bills, and accepts no such responsibility because of any representation by any agent or employee.

5.1.8 Payment Claims when Payment Bond not Required. The rights of

Subcontractors regarding payment are governed by Tex. Prop. Code §§ 53.231 – 53.239 when the value of the Contract between Owner and Contractor is less than $25,000.00. These provisions set out the requirements for filing a valid lien on funds unpaid to Contractor as of the time of filing the claim, actions necessary to release the lien and satisfaction of such claim.

5.1.9 Sureties. A surety shall be listed on the US Department of the Treasury's Listing of Approved Sureties maintained by the Bureau of Financial Management Service (FMS), www.fms.treas.gov/c570, stating companies holding Certificates of Authority as acceptable sureties on Federal bonds and acceptable reinsuring companies (FMS Circular 570).

5.2 Insurance Requirements. Contractor shall carry insurance in the types and amounts indicated in this Article for the duration of the Contract. The insurance shall be evidenced by delivery to Owner of certificates of insurance executed by the insurer or its authorized agent stating coverages, limits, expiration dates and compliance with all applicable required provisions. Upon request, Owner, and/or its agents, shall be entitled to receive without expense, copies of the policies and all endorsements. Contractor shall update all expired policies prior to submission for monthly payment. Failure to update policies shall be reason for withholding of payment until renewal is provided to Owner.

5.2.1 Contractor shall provide and maintain all insurance coverage with the minimum amounts described below until the end of the warranty period unless otherwise stated in Supplementary General Conditions or Special Conditions. Failure to maintain insurance coverage, as required, is grounds for suspension of Work for cause pursuant to Article 14.

5.2.2 Contractor shall deliver to Owner true and complete copies of certificates and corresponding policy endorsements prior to the issuance of any Notice to Proceed.

5.2.3 Failure of Owner to demand such certificates or other evidence of Contractor's full compliance with these insurance requirements or failure of Owner to identify a deficiency in compliance from the evidence provided shall not be construed as a waiver of Contractor's obligation to maintain such insurance.

5.2.4 The insurance and insurance limits required herein shall not be deemed as a limitation on Contractor's liability under the indemnities granted to Owner in the Contract Documents.

5.2.5 The insurance coverage and limits established herein shall not be interpreted as any representation or warranty that the insurance coverage and limits necessarily will be adequate to protect Contractor.

5.2.6 Coverage shall be written on an occurrence basis by companies authorized and admitted to do business in the State of Texas and rated A or better by A.M. Best Company or similar rating company or otherwise acceptable to Owner.

5.2.6.1 Insurance Coverage Required.

5.2.6.1.1 Workers' Compensation. Insurance with limits as required by the Texas Workers' Compensation Act, with the policy endorsed to provide a waiver of subrogation in favor of Owner, employer's liability insurance of not less than:

$1,000,000 each accident;

$1,000,000 disease each employee; and

$1,000,000 disease policy limit.

5.2.6.1.2 Commercial General Liability Insurance. Including premises, operations, independent contractor's liability, products and completed operations and contractual liability, covering, but not limited to, the liability assumed under the indemnification provisions of this Contract, fully insuring Contractor's liability for bodily injury (including death) and property damage with a minimum limit of:

$1,000,000 per occurrence;

$2,000,000 general aggregate;

$5,000 Medical Expense each person;

$1,000,000 Personal Injury and Advertising Liability;

$2,000,000 products and completed operations aggregate;

$50,000 Damage to Premises Rented to You;

and Coverage shall be on an "occurrence" basis.

The policy shall include coverage extended to apply to completed operations and explosion, collapse, and underground hazards. The policy shall include endorsement CG2503 Amendment of Aggregate Limits of Insurance (per Project) or its equivalent.

If the Work involves any activities within fifty (50) feet of any railroad, railroad protective insurance as may be required by the affected railroad, written for not less than the limits required by such railroad.

5.2.6.1.3 Asbestos Abatement Liability Insurance, including coverage for liability arising from the encapsulation, removal, handling, storage, transportation, and disposal of asbestos containing materials. *This requirement applies if the Work or the Project includes asbestos containing materials.

The combined single limit for bodily injury and property damage will be a minimum of $1,000,000 per occurrence.

*Specific requirement for claims-made form: Required period of coverage will be determined by the following formula: continuous coverage for life of the Contract, plus one (1) year (to provide coverage for the warranty period), and an extended discovery period for a minimum of five (5) years which shall begin at the end of the warranty period.

Employer's liability limits for asbestos abatement will be:

$500,000 each accident;

$500,000 disease each employee; and

$500,000 disease policy limit.

If this Contract is for asbestos abatement only, the Special Form builder's risk or Special Form installation floater (e) is not required.

5.2.6.1.4 Comprehensive Automobile Liability Insurance, covering owned, hired, and non-owned vehicles, with a minimum combined single limit for bodily injury (including death) and property damage of $1,000,000 per accident. No aggregate shall be permitted for this type of coverage.

Such insurance is to include coverage for loading and unloading hazards.

5.2.6.1.5 Special Form Builder's Risk Insurance, if applicable (or Special Form installation floater for instances in which the project involves solely the installation of material and/or equipment). Coverage shall be Special Form, including, but not limited to, fire, extended coverage, vandalism and malicious mischief, theft and, if applicable, flood, earth movement and named storm. Builder's risk and installation floater limits shall be equal to 100 percent of the Contract Sum plus, if any, existing property and Owner-furnished equipment specified by

Owner. The policy shall be written jointly in the names of Owner and Contractor. Subcontractors shall be named as additional insureds. The policy shall have endorsements as follows:

5.2.6.1.5.1 This insurance shall be specific as to coverage and not contributing insurance with any permanent insurance maintained on the property.

5.2.6.1.5.2 Per paragraph 12.2, upon notification by Owner that Owner desires to occupy all or a portion of the Work prior to Substantial Completion, Contractor shall be responsible for notifying and securing prior approval from the insurance company to ensure the coverage shall not be cancelled or lapsed on account of partial occupancy. Such approval shall not be unreasonably withheld and must be secured within a timeframe to meet Owner's needs.

5.2.6.1.5.3 Loss, if any, shall be adjusted with and made payable to Owner as trustee for the insureds as their interests may appear. Owner shall be named as loss payee.

5.2.6.1.5.4 The required insurance shall include coverage for Owner's property whether or not in the care, custody and control of Contractor prior to construction, during construction and during the warranty period (i.e., in the care, custody and control in the case of Builder's Risk Insurance, not in the care, custody and control in the case of General Liability, etc.).

5.2.6.1.5.5 For Owner furnished equipment or materials that will be in care, custody or control of Contractor, Contractor will be responsible for damage and loss.

5.2.6.1.5.6 For those properties located within a Tier 1 or 2 windstorm area, named storm coverage must be provided with limits specified by Owner.

5.2.6.1.5.7 For those properties located in flood prone areas, flood insurance coverage must be provided with limits specified by Owner.

5.2.6.1.5.8 Builder's risk insurance policy shall remain in effect until Substantial Completion.

5.2.6.1.6 "Umbrella" Liability Insurance. Contractor shall obtain, pay for and maintain umbrella liability insurance during the Contract term. "Umbrella" Liability Insurance shall be maintained for an amount of not less than $1,000,000 if the contract amount is less than $1,000,000. If the contract amount is $1,000,000 or more, the "Umbrella" Liability insurance shall be maintained for an amount of not less than $5,000,000. The policy shall provide "drop down" coverage where underlying primary insurance coverage limits are insufficient or exhausted.

5.2.7 Policies must include the following clauses, as applicable:

5.2.7.1 This insurance shall not be canceled, materially changed, or non-renewed except after thirty (30) days written notice has been given to Owner.

5.2.7.2 It is agreed that Contractor's insurance shall be deemed primary with respect to any insurance or self-insurance carried by Owner for liability arising out of operations under the Contract with Owner.

5.2.7.3 Owner, its officials, directors, employees, representatives, and volunteers are added as additional insureds as respects operations and activities of, or on behalf of the named insured performed under Contract with Owner. The additional insured status must cover completed operations as well. This is not applicable to workers' compensation policies.

5.2.7.4 A waiver of subrogation in favor of Owner shall be provided in all policies.

5.2.8 Without limiting any of the other obligations or liabilities of Contractor, Contractor shall require each Subcontractor performing work under the Contract, at Subcontractor's own expense, to maintain during the term of the Contract, the same stipulated minimum insurance including the required provisions and additional policy conditions as shown above. As an alternative, Contractor may include its Subcontractors as additional insureds on its own coverage as prescribed under these requirements. Contractor's certificate of insurance shall note in such event that Subcontractors are included as additional insureds and that Contractor agrees to provide workers' compensation for Subcontractors and their employees. Contractor shall obtain and monitor the certificates of insurance from each Subcontractor in order to assure compliance with the insurance requirements. Contractor must retain the certificates of insurance for the duration of the Contract plus five (5) years and shall have the responsibility of enforcing these insurance requirements among its

Subcontractors. Owner shall be entitled, upon request and without expense, to receive copies of these certificates.

5.2.8.1 Contractor shall deliver to Owner true and complete copies of the certificates prior to the issuance of any Notice to Proceed.

5.2.8.2 Failure of Owner to demand such certificates or other evidence of Contractor's full compliance with these insurance requirements or failure of Owner to identify a deficiency in compliance from the evidence provided shall not be construed as a waiver of Contractor's obligation to maintain such insurance.

5.2.8.3 The insurance coverage and limits established in the Uniform General Conditions, Supplementary General Conditions, or Special Conditions shall not be interpreted as any representation or warranty that the insurance coverage and limits necessarily will be adequate to protect Contractor.

5.2.9 Workers' compensation insurance coverage must be provided for all workers at all tier levels and meet the statutory requirements of Tex. Lab. Code § 401.011(44) and specific to construction projects for public entities as required by Tex. Lab. Code § 406.096.

Article 6. Construction Documents, Coordination Documents, and Record Documents

6.1 Drawings and Specifications.

6.1.1 Copies Furnished. Contractor shall be provided electronic Drawings and Specification, free of charge. If requested by Contractor, hard copies (paper) of Drawings and Specification shall be provided at the reimbursable cost agreed upon by Owner. The number of hard copies provided shall be acceptable to the ODR.

6.1.2 Ownership of Drawings and Specifications. All Drawings, Specifications and copies thereof furnished by the A/E shall be the physical property of Owner and are to remain the intellectual property of A/E. These documents are not to be used on any other project. Owner may use the Contract record set and electronic versions as needed for warranty, operations and maintenance or future renovations or additions without written approval of A/E. All additional or confirmatory land survey field notes, investigations, samples, calculations, test results, and reports, for which Owner has paid for such direct services, shall be the sole property of Owner.

6.1.3 Interrelation of Documents. The Contract Documents as referenced in the Contract between Owner and Contractor are complimentary, and what is required by one shall be as binding as if required by all.

6.1.4 Resolution of Conflicts in Documents. Where conflicts may exist within the Contract Documents, the documents shall govern in the following order: (a) Change Orders, addenda, and written amendments to the Contract; (b) the Contract; (c) Drawings; (d) Specifications (but Specifications shall control over Drawings as to quality of materials and workmanship); and (e) other Contract Documents. Among categories of documents having the same order of precedence, the term or provision that includes the latest date shall control and more specific requirements shall govern over general requirements. Contractor shall notify A/E and ODR for resolution of the issue prior to executing the Work in question.

6.1.5 Contractor's Duty to Review Contract Documents. In order to facilitate its responsibilities for completion of the Work in accordance with and as reasonably inferable from the Contract Documents, prior to commencing the Work, Contractor shall examine and compare the Contract Documents, information furnished by Owner, relevant field measurements made by Contractor and any visible or reasonably anticipated conditions at the Site affecting the Work. This duty extends throughout the construction phase prior to commencing each particular work activity and/or system installation.

6.1.6 Discrepancies and Omissions in Drawings and Specifications.

6.1.6.1 Promptly report to ODR and to A/E the discovery of any apparent error, omission or inconsistency in the Contract Documents prior to execution of the Work.

6.1.6.2 It is recognized that Contractor is not acting in the capacity of a licensed design professional, unless it is performing as a Design-Build firm.

6.1.6.3 It is further recognized that Contractor's examination of Contract Documents is to facilitate construction and does not create an affirmative responsibility to detect errors, omissions or inconsistencies or to ascertain compliance with applicable laws, building codes or regulations, unless it is performing as a Design-Build firm or a Construction Manager-at-Risk.

6.1.6.4 When performing as a Design-Build firm, Contractor has sole responsibility for discrepancies, errors, and omissions in the Drawings and Specifications.

6.1.6.5 When performing as a Construction Manager-at-Risk, Contractor has a shared responsibility with A/E for discovery and resolution of discrepancies, errors, and omissions in the Contract Documents. In such case, Contractor's responsibility pertains to review, coordination, and recommendation of resolution strategies within budget constraints.

6.1.6.6 Contractor has no liability for errors, omissions, or inconsistencies unless Contractor knowingly failed to report a recognized problem to

Owner or the Work is executed under a Design-Build or Construction Manager-at-Risk Contract as outlined above. Should Contractor fail to perform the examination and reporting obligations of these provisions, Contractor is responsible for avoidable costs and direct and/or consequential damages.

6.2 Requirements for Record Documents. Contractor shall:

6.2.1 Maintain at the Site one copy of all Drawings, Specifications, addenda, approved submittals, Contract modifications, and all Project correspondence. Keep current and maintain Drawings and Specifications in good order with postings and markings to record actual conditions of Work and show and reference all changes made during construction. Provide Owner and A/E access to these documents.

6.2.2 Maintain the Record Documents including Drawings, Specifications and other materials which reflect the actual field conditions and representations of the Work performed, whether it be directed by addendum, Change Order or otherwise. Make available all records prescribed herein for reference and examination by Owner and its representatives and agents.

6.2.3 Update the Record Documents at least monthly prior to submission of periodic partial pay estimates. Failure to maintain current Record Documents constitutes cause for denial of a progress payment otherwise due.

6.2.4 Prior to requesting Substantial Completion inspection Contractor shall furnish a copy of its marked-up Record Documents and a preliminary copy of each instructional manual, maintenance and operating manual, parts catalog, wiring diagrams, spare parts, specified written warranties and like publications, or parts for all installed equipment, systems, and like items and as described in the Contract Documents. (Unexecuted samples of the aforementioned documentation may be reviewed by ODR when the absence of substantial completion transactions preclude execution; however, Contractor remains obligated to provide fully executed copies of such materials prior to final payment.)

6.2.5 Once determined acceptable by ODR with input from A/E, provide one (1) reproducible copy and one (1) electronic media copy of all Record Documents, unless otherwise required by the Supplementary General Conditions or Special Conditions.

6.2.6 Contractor shall be responsible for updating the Record Documents for all Contractor initiated documents and changes to the Contract Documents due to coordination and actual field conditions, including RFIs.

6.2.7 A/E shall be responsible for updating the Record Documents for any addenda, Change Orders, A/E supplemental instructions and any other alterations to the Contract Documents generated by A/E or Owner.

Article 7. Construction Safety

7.1 General. It is the duty and responsibility of Contractor and all of its Subcontractors to be familiar with, enforce and comply with all requirements of Public Law No. 91- 596, 29 U.S.C. § 651 et. seq., the Occupational Safety and Health Act of 1970, (OSHA) and all amendments thereto. Contractor shall prepare a safety plan specific to the Project and submit it to ODR and A/E prior to commencing Work. In addition, Contractor and all of its Subcontractors shall comply with all applicable laws and regulations of any public body having jurisdiction for safety of persons or property to protect them from damage, injury or loss and erect and maintain all necessary safeguards for such safety and protection.

7.2 Notices. Contractor shall provide notices as follows:

7.2.1 Notify owners of adjacent property including those that own or operate utility services and/or underground facilities, and utility owners, when prosecution of the Work may affect them or their facilities, and cooperate with them in the protection, removal, relocation and replacement, and access to their facilities and/or utilities.

7.2.2 Coordinate the exchange of material safety data sheets (MSDSs) or other hazard communication information required to be made available to or exchanged between or among employers at the site in connection with laws and regulations. Maintain a complete file of MSDSs for all materials in use on site throughout the construction phase and make such file available to Owner and its agents as requested.

7.3 Emergencies. In any emergency affecting the safety of persons or property, Contractor shall act to minimize, mitigate, and prevent threatened damage, injury or loss.

7.3.1 Have authorized agents of Contractor respond immediately upon call at any time of day or night when circumstances warrant the presence of Contractor to protect the Work or adjacent property from damage or to take such action pertaining to the Work as may be necessary to provide for the safety of the public.

7.3.2 Give ODR and A/E prompt notice of all such events.

7.3.3 If Contractor believes that any changes in the Work or variations from Contract Documents have been caused by its emergency response, promptly notify Owner within seventy-two (72) hours of the emergency response event.

7.3.4 Should Contractor fail to respond, Owner is authorized to direct other forces to take action as necessary and Owner may deduct any cost of remedial action from funds otherwise due Contractor.

7.4 Injuries. In the event of an incident or accident involving outside medical care for an individual on or near the Work, Contractor shall notify ODR and other parties as may

be directed promptly, but no later than twenty-four (24) hours after Contractor learns that an event required medical care.

7.4.1 Record the location of the event and the circumstances surrounding it, by using photography or other means, and gather witness statements and other documentation which describes the event.

7.4.2 Supply ODR and A/E with an incident report no later than thirty-six (36) hours after the occurrence of the event. In the event of a catastrophic incident (one (1) fatality or three (3) workers hospitalized), barricade and leave intact the scene of the incident until all investigations are complete. A full set of incident investigation documents, including facts, finding of cause, and remedial plans shall be provided within one (1) week after occurrence, unless otherwise directed by legal counsel. Contractor shall provide ODR with written notification within one week of such catastrophic event if legal counsel delays submission of full report.

7.5 Environmental Safety. Upon encountering any previously unknown potentially hazardous material, or other materials potentially contaminated by hazardous material, Contractor shall immediately stop work activities impacted by the discovery, secure the affected area, and notify ODR immediately.

7.5.1 Bind all Subcontractors to the same duty.

7.5.2 Upon receiving such notice, ODR will promptly engage qualified experts to make such investigations and conduct such tests as may be reasonably necessary to determine the existence or extent of any environmental hazard. Upon completion of this investigation, ODR will issue a written report to Contractor identifying the material(s) found and indicate any necessary steps to be taken to treat, handle, transport or dispose of the material.

7.5.3 Owner may hire third-party Contractors to perform any or all such steps.

7.5.4 Should compliance with ODR's instructions result in an increase in Contractor's cost of performance, or delay the Work, Owner will make an equitable adjustment to the Contract Sum and/or the time of completion, and modify the Contract in writing accordingly.

7.6 Trenching Plan. When the project requires excavation which either exceeds a depth of four (4) feet, or results in any worker's upper body being positioned below grade level, Contractor is required to submit a trenching plan to ODR prior to commencing trenching operations unless an engineered plan is part of the Contract Documents. The plan is required to be prepared and sealed by a professional engineer registered in the State of Texas, and hired or employed by Contractor or Subcontractor to perform the work. Said engineer cannot be anyone who is otherwise either directly or indirectly engaged on this project.

Article 8. Quality Control

8.1 Materials & Workmanship. Contractor shall execute Work in a good and workmanlike manner in accordance with the Contract Documents. Contractor shall develop and provide a quality control plan specific to this Project and acceptable to Owner. Where Contract Documents do not specify quality standards, complete and construct all Work in compliance with generally accepted construction industry standards. Unless otherwise specified, incorporate all new materials and equipment into the Work under the Contract.

8.2 Testing.

8.2.1 Owner is responsible for coordinating and paying for routine and special tests required to confirm compliance with quality and performance requirements, except as stated below or otherwise required by the Contract Documents. Contractor shall provide the following testing:

8.2.1.1 Any test of basic material or fabricated equipment included as part of a submittal for a required item in order to establish compliance with the Contract Documents.

8.2.1.2 Any test of basic material or fabricated equipment offered as a substitute for a specified item on which a test may be required in order to establish compliance with the Contract Documents.

8.2.1.3 Preliminary, start-up, pre-functional and operational testing of building equipment and systems as necessary to confirm operational compliance with requirements of the Contract Documents.

8.2.1.4 All subsequent tests on original or replaced materials conducted as a result of prior testing failure.

8.2.2 All testing shall be performed in accordance with standard test procedures by an accredited laboratory, or special consultant as appropriate, acceptable to Owner. Results of all tests shall be provided promptly to ODR, A/E, and Contractor.

8.2.3 Non-Compliance (Test Results). Should any of the tests indicate that a material and/or system does not comply with the Contract requirements, the burden of proof remains with Contractor, subject to:

8.2.3.1 Contractor selection and submission of the laboratory for Owner acceptance.

8.2.3.2 Acceptance by Owner of the quality and nature of tests.

8.2.3.3 All tests taken in the presence of A/E and/or ODR, or their representatives.

8.2.3.4 If tests confirm that the material/systems comply with Contract Documents, Owner will pay the cost of the test.

8.2.3.5 If tests reveal noncompliance, Contractor will pay those laboratory fees and costs of that particular test and all future tests, of that failing Work, necessary to eventually confirm compliance with Contract Documents.

8.2.3.6 Proof of noncompliance with the Contract Documents will make Contractor liable for any corrective action which ODR determines appropriate, including complete removal and replacement of non-compliant work or material.

8.2.4 Notice of Testing. Contractor shall give ODR and A/E timely notice of its readiness and the date arranged so ODR and A/E may observe such inspection, testing, or approval.

8.2.5 Test Samples. Contractor is responsible for providing Samples of sufficient size for test purposes and for coordinating such tests with their Work Progress Schedule to avoid delay.

8.2.6 Covering Up Work. If Contractor covers up any Work without providing Owner an opportunity to inspect, Contractor shall, if requested by ODR, uncover and recover the work at Contractor's expense.

8.3 Submittals.

8.3.1 Contractor's Submittals. Contractor shall submit with reasonable promptness consistent with the Project schedule and in orderly sequence all Shop Drawings, Samples, or other information required by the Contract Documents, or subsequently required by Change Order. Prior to submitting, Contractor shall review each submittal for general compliance with Contract Documents and approve submittals for review by A/E and Owner by an approval stamp affixed to each copy. Submittal data presented without Contractor's stamp will be returned without review or comment, and any delay resulting from failure is Contractor's responsibility.

8.3.1.1 Contractor shall within twenty-one (21) days of the effective date of the Notice To Proceed with construction, submit to ODR and A/E, a submittal schedule/register, organized by specification section, listing all items to be furnished for review and approval by A/E and Owner. The list shall include Shop Drawings, manufacturer's literature, certificates of compliance, materials Samples, materials colors, guarantees, and all other items identified throughout the Specifications.

8.3.1.2 Contractor shall indicate the type of item, Contract requirements reference, and Contractor's scheduled dates for submitting the item along with the requested dates for approval answers from A/E and Owner. The submittal register shall indicate the projected dates for procurement of all included items and shall be updated at least monthly with actual approval and procurement dates. Contractor's Submittal Register must be reasonable in terms of the review time for

complex submittals. Contractor's submittal schedule must be consistent with the Work Progress Schedule and identify critical submittals. Show and allow a minimum of fifteen (15) calendar days duration after receipt by A/E and ODR for review and approval. If resubmittal required, allow a minimum of an additional fifteen (15) calendar days for review. Submit the updated Submittal Register with each request for progress payment. Owner may establish routine review procedures and schedules for submittals at the preconstruction conference and/or elsewhere in the Contract Documents. If Contractor fails to update and provide the Submittal Register as required, Owner may, after seven (7) days' notice to Contractor withhold a reasonable sum of money that would otherwise be due Contractor.

8.3.1.3 Contractor shall coordinate the Submittal Register with the Work Progress Schedule. Do not schedule Work requiring a submittal to begin prior to scheduling review and approval of the related submittal. Revise and/or update both schedules monthly to ensure consistency and current project data. Provide to ODR the updated Submittal Register and schedule with each application for progress payment. Refer to requirements for the Work Progress Schedule for inclusion of procurement activities therein. Regardless, the Submittal Register shall identify dates submitted and returned and shall be used to confirm status and disposition of particular items submitted, including approval or other action taken and other information not conveniently tracked through the Work Progress Schedule.

8.3.1.4 By submitting Shop Drawings, Samples or other required information, Contractor represents that it has determined and verified all applicable field measurements, field construction criteria, materials, catalog numbers and similar data to the extent possible from existing conditions and design information provided by A/E prior to fabrication; and has checked and coordinated each Shop Drawing and Sample with the requirements of the Work and the Contract Documents.

8.3.2 Review of Submittals. A/E and ODR review is only for conformance with the design concept and the information provided in the Contract Documents. Responses to submittals will be in writing. The approval of a separate item does not indicate approval of an assembly in which the item functions. The approval of a submittal does not relieve Contractor of responsibility for any deviation from the requirements of the Contract unless Contractor informs A/E and ODR of such deviation in a clear, conspicuous, and written manner on the submittal transmittal and at the time of submission, and obtains Owner's written specific approval of the particular deviation.

8.3.3 Correction and Resubmission. Contractor shall make any corrections required to a submittal and resubmit the required number of corrected copies promptly so as to avoid delay, until submittal approval. Direct attention in writing to A/E and ODR, when applicable, to any new revisions other than the

corrections requested on previous submissions.

8.3.4 Limits on Shop Drawing Review. Contractor shall not commence any Work requiring a submittal until review of the submittal under Subsection 8.3.2. Construct all such work in accordance with reviewed submittals. Comments incorporated as part of the review in Subsection 8.3.2 of Shop Drawings and Samples is not authorization to Contractor to perform extra work or changed work unless authorized through a Change Order. A/E's and ODR's review, if any, does not relieve Contractor from responsibility for defects in the Work resulting from errors or omissions of any kind on the submittal, regardless of any approval action. A/E or ODR shall not make formal changes to the Contract Documents via the submittal process. Changes to the Construction Documents shall be accomplished via Section 3.2.2 and Article 11 Changes.

8.3.5 No Substitutions Without Approval. ODR and A/E may receive and consider Contractor's request for substitution when Contractor agrees to reimburse Owner for review costs and satisfies the requirements of this section. If Contractor does not satisfy these conditions, ODR and A/E will return the request without action except to record noncompliance with these requirements. Owner will not consider the request if Contractor cannot provide the product or method because of failure to pursue the Work promptly or coordinate activities properly. Contractor's request for a substitution may be considered by ODR and A/E when:

8.3.5.1 The Contract Documents do not require extensive revisions; and

8.3.5.2 Proposed changes are in keeping with the general intent of the Contract Documents and the design intent of A/E and do not result in an increase in cost to Owner; and

8.3.5.3 The request is timely, fully documented, properly submitted and one or more of the following apply:

8.3.5.3.1 Contractor cannot provide the specified product, assembly or method of construction within the Contract Time;

8.3.5.3.2 The request directly relates to an "or-equal" clause or similar language in the Contract Documents;

8.3.5.3.3 The request directly relates to a "product design standard" or "performance standard" clause in the Contract Documents;

8.3.5.3.4 The requested substitution offers Owner a substantial advantage in cost, time, energy conservation or other considerations, after deducting additional responsibilities Owner must assume;

8.3.5.3.5 The specified product or method of construction cannot

receive necessary approval by an authority having jurisdiction, and ODR can approve the requested substitution;

8.3.5.3.6 Contractor cannot provide the specified product, assembly or method of construction in a manner that is compatible with other materials and where Contractor certifies that the substitution will overcome the incompatibility;

8.3.5.3.7 Contractor cannot coordinate the specified product, assembly or method of construction with other materials and where Contractor certifies they can coordinate the proposed substitution; or

8.3.5.3.8 The specified product, assembly or method of construction cannot provide a warranty required by the Contract Documents and where Contractor certifies that the proposed substitution provides the required warranty.

8.3.5.3.9 The manufacture of the specified product has been removed from production due to cancellation or obsolescence.

8.3.6 Unauthorized Substitutions at Contractor's Risk. Contractor is financially responsible for any additional costs or delays resulting from unauthorized substitution of materials, equipment or fixtures other than those specified. Contractor shall reimburse Owner for any increased design or contract administration costs resulting from such unauthorized substitutions.

8.4 Field Mock-up.

8.4.1 Mock-ups shall be constructed prior to commencement of a specified scope of work to confirm acceptable workmanship.

8.4.1.1 As a minimum, field mock-ups shall be constructed for roofing systems, exterior veneer / finish systems, glazing systems, and any other Work requiring a mock-up as identified throughout the Contract Documents. Mock-ups for systems not part of the Project scope shall not be required.

8.4.1.2 Mock-ups may be incorporated into the Work if allowed by the Contract Documents and if acceptable to ODR. If mock-ups are freestanding, they shall remain in place until otherwise directed by Owner.

8.4.1.3 Contractor shall include field mock-ups in their Work Progress Schedule and shall notify ODR and A/E of readiness for review sufficiently in advance to coordinate review without delay.

8.5 Inspection During Construction.

8.5.1 Contractor shall provide sufficient, safe, and proper facilities, including equipment as necessary for safe access, at all reasonable times for observation and/or inspection of the Work by Owner and its agents. "Reasonable times" of inspection allow for sufficient monitoring of the quality of materials and installation without substantially impeding the progress of the Work.

8.5.2 Contractor shall not cover up any Work with finishing materials or other building components prior to providing Owner and its agents an opportunity to perform an inspection of the Work.

8.5.2.1 Should corrections of the Work be required for approval, Contractor shall not cover-up corrected Work until Owner indicates approval.

8.5.2.2 Contractor shall provide notification of at least five (5) working days or otherwise as mutually agreed, to ODR of the anticipated need for a cover-up inspection. Should ODR fail to make the necessary inspection within the agreed period, Contractor may proceed with cover-up Work, but is not relieved of responsibility for Work to comply with requirements of the Contract Documents.

Article 9. Construction Schedules

9.1 Contract Time. **TIME IS AN ESSENTIAL ELEMENT OF THE CONTRACT**. The Contract Time is the time between the dates indicated in the Notice to Proceed for commencement of the Work and for achieving Substantial Completion. The Contract Time can be modified only by Change Order. Failure to achieve Substantial Completion within the Contract Time as otherwise agreed to in writing will cause damage to Owner and may subject Contractor to liquidated damages as provided in the Contract Documents. If Contractor fails to achieve Final Completion within thirty (30) calendar days after Substantial Completion or a mutually agreed upon longer period of time between Contractor and Owner, Contractor shall be responsible for Owner's additional inspection, project management, and maintenance cost to the extent caused by Contractor's failure to achieve Final Completion.

9.2 Notice to Proceed. Owner will issue a Notice to Proceed which shall state the dates for beginning Work and for achieving Substantial Completion of the Work.

9.3 Work Progress Schedule. Refer to Supplementary General Conditions or Special Conditions for additional schedule requirements. Unless indicated otherwise in those documents, Contractor shall submit their initial Work Progress Schedule for the Work in relation to the entire Project not later than twenty-one (21) days after the effective date of the Notice to Proceed to ODR and A/E. Unless otherwise indicated in the Contract Documents, the Work Progress Schedule shall be computerized Critical Path Method (CPM) with fully editable logic. This initial schedule shall indicate the dates for starting and completing the various aspects required to complete the Work, including mobilization, procurement, installation, testing, inspection, delivery of Close-out Documents and acceptance of all the Work of the Contract. When acceptable to Owner, the initially accepted schedule shall be the Baseline Schedule for comparison

to actual conditions throughout the Contract duration. In the event the Baseline Schedule, or any revisions thereto, reflect a Substantial Completion date that will occur sooner than the Final Completion date as set forth in the Contract Documents, or other similar agreement, the period of time between the Substantial Completion date and the Final Completion date shall be considered the "float."

9.3.1 Schedule Requirements. Contractor shall submit electronic and paper copy of Work Progress Schedule reflecting accurate and reliable representations of the planned progress of the Work, the Work to date if any, and of Contractor's actual plans for its completion. Contractor shall organize and provide adequate detail so the schedule is capable of measuring and forecasting the effect of delaying events on completed and uncompleted activities.

9.3.1.1 Contractor shall resubmit initial schedule as required to address review comments from A/E and ODR until such schedule is accepted as the Baseline Schedule.

9.3.1.2 Submittal of a schedule, schedule revision or schedule update constitutes Contractor's representation to Owner of the accurate depiction of all progress to date and that Contractor will follow the schedule as submitted in performing the Work.

9.3.2 Schedule Updates. Contractor shall update the Work Progress Schedule and the Submittal Register monthly, as a minimum, to reflect progress to date and current plans for completing the Work, while maintaining original schedule as Baseline Schedule and submit paper and electronic copies of the update to A/E and ODR as directed, but as a minimum with each request for payment. Owner has no duty to make progress payments unless accompanied by the updated Work Progress Schedule. Show the anticipated date of completion reflecting all extensions of time granted through Change Order as of the date of the update. Contractor may revise the Work Progress Schedule when in Contractor's judgment it becomes necessary for the management of the Work. Contractor shall identify all proposed changes to schedule logic to Owner and to A/E via an executive summary accompanying the updated schedule for review prior to final implementation of revisions into a revised Baseline Schedule. Schedule changes that materially impact Owner's operations shall be communicated promptly to ODR and shall not be incorporated into the revised Baseline Schedule without ODR's consent.

9.3.3 The Work Progress Schedule is for Contractor's use in managing the Work and submittal of the schedule, and successive updates or revisions, is for the information of Owner and to demonstrate that Contractor has complied with requirements for planning the Work. Owner's acceptance of a schedule, schedule update or revision constitutes Owner's agreement to coordinate its own activities with Contractor's activities as shown on the schedule.

9.3.3.1 Acceptance of the Work Progress Schedule, or update and/or revision

thereto does not indicate any approval of Contractor's proposed sequences and duration.

9.3.3.2 Acceptance of a Work Progress Schedule update or revision indicating early or late completion does not constitute Owner's consent, alter the terms of the Contract, or waive either Contractor's responsibility for timely completion or Owner's right to damages for Contractor's failure to do so.

9.3.3.3 Contractor's scheduled dates for completion of any activity or the entire Work do not constitute a change in terms of the Contract. Change Orders are the only method of modifying the Substantial Completion Date(s) and Contract Time.

9.4 Ownership of Float. Unless indicated otherwise in the Contract Documents, Contractor shall develop its schedule, pricing, and execution plan to provide a minimum of ten (10) percent total float at acceptance of the Baseline Schedule. Float time contained in the Work Progress Schedule is not for the exclusive benefit of Contractor or Owner, but belongs to the Project and may be consumed by either party as needed on a first-used basis.

9.5 Completion of Work. Contractor is accountable for completing the Work within the Contract Time stated in the Contract, or as otherwise amended by Change Order.

9.5.1 If, in the judgment of Owner, the work is behind schedule and the rate of placement of work is inadequate to regain scheduled progress to insure timely completion of the entire work or a separable portion thereof, Contractor, when so informed by Owner, shall immediately take action to increase the rate of work placement by:

9.5.1.1 An increase in working forces.

9.5.1.2 An increase in equipment or tools.

9.5.1.3 An increase in hours of work or number of shifts.

9.5.1.4 Expedite delivery of materials.

9.5.1.5 Other action proposed if acceptable to Owner.

9.5.2 Within ten (10) days after such notice from ODR, Contractor shall notify ODR in writing of the specific measures taken and/or planned to increase the rate of progress. Contactor shall include an estimate as to the date of scheduled progress recovery and an updated Work Progress Schedule illustrating Contractor's plan for achieving timely completion of the Project. Should ODR deem the plan of action inadequate, Contractor shall take additional steps or make adjustments as necessary to its plan of action until it meets with ODR's approval.

9.6 Modification of the Contract Time.

9.6.1 Delays and extension of time as hereinafter described are valid only if executed in accordance with provisions set forth in Article 11.

9.6.2 When a delay defined herein as excusable prevents Contractor from completing the Work within the Contract Time, Contractor is entitled to an extension of time. Owner will make an equitable adjustment and extend the number of days lost because of excusable delay or Weather Days, as measured by Contractor's progress schedule. All extensions of time will be granted in calendar days. In no event, however, will an extension of time be granted for delays that merely extend the duration of non-critical activities, or which only consume float without delaying the project Substantial Completion date(s). Provided, however, all float must be consumed by approved excusable delays to the critical path before any extension of time can be granted.

9.6.2.1 A "Weather Day" is a day on which Contractor's current schedule indicates Work is to be done, and on which inclement weather and/or related site conditions prevent Contractor from performing seven (7) continuous hours of Work o n t h e critical path between the hours of 7:00 a.m. and 6:00 p.m. Weather days are excusable delays. When weather conditions at the site prevent work from proceeding, Contractor shall immediately notify ODR for confirmation of the conditions. At the end of each calendar month, submit to ODR and A/E a list of Weather Days occurring in that month along with documentation of the impact on critical activities. Based on confirmation by ODR, any time extension granted will be issued by Change Order. If Contractor and Owner cannot agree on the time extension, Owner may issue a ULCO for fair and reasonable time extension.

9.6.2.2 Excusable Delay. Contractor is entitled to an equitable adjustment of the Contract Time, issued via change order, for delays caused by the following:

9.6.2.2.1 Errors, omissions and imperfections in design, which A/E corrects by means of changes in the Drawings and Specifications.

9.6.2.2.2 Unanticipated physical conditions at the Site, which A/E corrects by means of changes to the Drawings and Specifications or for which ODR directs changes in the Work identified in the Contract Documents.

9.6.2.2.3 Failure of Owner to have secured property, right-of-way or easements necessary for Work to begin or progress.

9.6.2.2.4 Changes in the Work that effect activities identified in

Contractor's schedule as "critical" to completion of the entire Work, if such changes are ordered by ODR or recommended by A/E and ordered by ODR.

9.6.2.2.5 Suspension of Work for unexpected natural events, Force Majeure (sometimes called "acts of God"), civil unrest, strikes or other events which are not within the reasonable control of Contractor.

9.6.2.2.6 Suspension of Work for convenience of ODR, which prevents Contractor from completing the Work within the Contract Time.

9.6.2.2.7 Administrative delays caused by activities or approval requirements related to an Authority Having Jurisdiction.

9.6.3 Contractor's relief in the event of such delays is the time impact to the critical path as determined by analysis of Contractor's schedule. In the event that Contractor incurs additional direct costs because of the excusable delays other than described in Subparagraph 9.6.2.2.4 and within the reasonable control of Owner, the Contract price and Contract Time are to be equitably adjusted by Owner pursuant to the provisions of Article 11.

9.7 No Damages for Delay. Contractor has no claim for monetary damages for delay or hindrances to the work from any cause, including without limitation any act or omission of Owner.

9.8 Concurrent Delay. When the completion of the Work is simultaneously delayed by an excusable delay and a delay arising from a cause not designated as excusable, Contractor may not be entitled to a time extension for the period of concurrent delay.

9.9 Other Time Extension Requests. Time extensions requested in association with changes to the Work directed or requested by Owner shall be included with Contractor's proposed costs for such change. Time extensions requested for inclement weather are covered by Paragraph 9.6.2.1 above. If Contractor believes that the completion of the Work is delayed by a circumstance other than for changes directed to the Work or weather, they shall give ODR written notice, stating the nature of the delay and the activities potentially affected, within five (5) days after the onset of the event or circumstance giving rise to the excusable delay. Contractor shall provide sufficient written evidence to document the delay. In the case of a continuing cause of delay, only one claim is necessary. State claims for extensions of time in numbers of whole or half days.

9.9.1 Within ten (10) days after the cessation of the delay, Contractor shall formalize its request for extension of time in writing to include a full analysis of the schedule impact of the delay and substantiation of the excusable nature of the delay. All changes to the Contract Time or made as a result of such claims is by Change Order, as set forth in Article 11.

9.9.2 No extension of time releases Contractor or the Surety furnishing a performance or payment bond from any obligations under the Contract or such a bond. Those obligations remain in full force until the discharge of the Contract.

9.9.3 Contents of Time Extension Requests. Contractor shall provide with each Time Extension Request a quantitative demonstration of the impact of the delay on project completion time, based on the Work Progress Schedule. Contractor shall include with Time Extension Requests a reasonably detailed narrative setting forth:

9.9.3.1 The nature of the delay and its cause; the basis of Contractor's claim of entitlement to a time extension.

9.9.3.2 Documentation of the actual impacts of the claimed delay on the critical path indicated in Contractor's Work Progress Schedule, and any concurrent delays.

9.9.3.3 Description and documentation of steps taken by Contractor to mitigate the effect of the claimed delay, including, when appropriate, the modification of the Work Progress Schedule.

9.9.4 Owner's Response. Owner will respond to the Time Extension Request by providing to Contractor written notice of the number of days granted, if any, and giving its reason if this number differs from the number of days requested by Contractor.

9.9.4.1 Owner will not grant time extensions for delays that do not affect the Contract Substantial Completion date.

9.9.4.2 Owner will respond to each properly submitted Time Extension Request within fifteen (15) days following receipt. If Owner cannot reasonably make a determination about Contractor's entitlement to a time extension within that time, Owner will notify Contractor in writing. Unless otherwise agreed by Contractor, Owner has no more than fifteen (15) additional days to prepare a final response. If Owner fails to respond within forty-five (45) days from the date the Time Extension Request is received, Contractor is entitled to a time extension in the amount requested.

9.10 Failure to Complete Work Within the Contract Time. **TIME IS AN ESSENTIAL ELEMENT OF THE CONTRACT.** Contractor's failure to substantially complete the Work within the Contract Time or to achieve Substantial Completion as required will cause damage to Owner. These damages shall be liquidated by agreement of Contractor and Owner, in the amount per day as set forth in the Contract Documents.

9.11 Liquidated Damages. Owner may collect liquidated damages due from Contractor directly or indirectly by reducing the Contract Sum in the amount of liquidated damages stated in the Supplementary General Conditions or Special Conditions.

Article 10. Payments

10.1 Schedule of Values. Contractor shall submit to ODR and A/E for acceptance a Schedule of Values accurately itemizing material and labor for the various classifications of the Work based on the organization of the specification sections and of sufficient detail acceptable to ODR. The accepted Schedule of Values will be the basis for the progress payments under the Contract.

10.1.1 No progress payments will be made prior to receipt and acceptance of the Schedule of Values, provided in such detail as required by ODR, and submitted not less than twenty-one (21) days prior to the first request for payment. The Schedule of Values shall follow the order of trade divisions of the Specifications and include itemized costs for general conditions, costs for preparing close out documents, fees, contingencies, and Owner cash allowances, if applicable, so that the sum of the items will equal the Contract price. As appropriate, assign each item labor and/or material values, the subtotal thereof equaling the value of the work in place when complete.

10.1.1.1 Owner requires that the Work items be inclusive of the cost of the Work items only. Any contract markups for overhead and profit, general conditions, etc., shall be contained within separate line items for those specific purposes which shall be divided into at least two(2) lines, one (1) for labor and one (1) for materials.

10.1.2 Contractor shall retain a copy of all worksheets used in preparation of its bid or proposal, supported by a notarized statement that the worksheets are true and complete copies of the documents used to prepare the bid or proposal. Make the worksheets available to ODR at the time of Contract execution. Thereafter Contractor shall grant Owner during normal business hours access to said copy of worksheets at any time during the period commencing upon execution of the Contract and ending one year after final payment.

10.2. Progress Payments. Contractor will receive periodic progress payments for Work performed, materials in place, suitably stored on Site, or as otherwise agreed to by Owner and Contractor. Payment is not due until receipt by ODR or his designee of a correct and complete Pay Application in electronic and hard copy format and certified by A/E. Progress payments are made provisionally and do not constitute acceptance of work not in accordance with the Contract Documents. Owner will not process progress payment applications for Change Order Work until all parties execute the Change Order.

10.2.1 Preliminary Pay Worksheet. Once each month that a progress payment is to be requested, the Contractor shall submit to A/E and ODR a complete, clean copy of a preliminary pay worksheet or preliminary pay application, to include the following:

10.2.1.1 Contractor's estimate of the amount of Work performed, labor furnished and materials incorporated into the Work, using the established Schedule of Values;

10.2.1.2 An updated Work Progress Schedule including the executive summary and all required schedule reports;

10.2.1.3 HUB subcontracting plan Progress Assessment Report as required in Paragraph 4.2.5.1;

10.2.1.4 Reimbursable expenses incurred solely and directly in support of the Project as agreed upon between Owner and A/E or Contractor. Provided that travel expenditures are at the State of Texas reimbursable rates, are at actual cost incurred, or are otherwise agreed upon by Owner.

10.2.1.5 Such additional documentation as Owner may require as set forth in the Supplementary General Conditions or elsewhere in the Contract Documents; and

10.2.1.6 Construction payment affidavit.

10.2.2 Contractor's Application for Payment. As soon as practicable, but in no event later than seven (7) days after receipt of the preliminary pay worksheet, A/E and ODR will meet with Contractor to review the preliminary pay worksheet and to observe the condition of the Work. Based on this review, ODR and A/E may require modifications to the preliminary pay worksheet prior to the submittal of an Application for Payment, and will promptly notify Contractor of revisions necessary for approval. As soon as practicable, Contractor shall submit its Application for Payment on the appropriate and completed form, reflecting the required modifications to the Schedule of Values required by A/E and/or ODR. Attach all additional documentation required by ODR and/or A/E, as well as an affidavit affirming that all payrolls, bills for labor, materials, equipment, subcontracted work and other indebtedness connected with Contractor's Application for Payment are paid or will be paid within the time specified in Tex. Gov't Code, Ch. 2251. No Application for Payment is complete unless it fully reflects all required modifications, and attaches all required documentation including Contractor's affidavit.

10.2.3 Certification by Architect/Engineer. Within five (5) days or earlier following A/E's receipt of Contractor's formal Application for Payment, A/E will review the Application for Payment for completeness, and forward it to ODR. A/E will certify that the application is complete and payable, or that it is incomplete, stating in particular what is missing. If the Application for Payment is incomplete, Contractor shall make the required corrections and resubmit the Application for Payment for processing.

10.3 Owner's Duty to Pay. Owner has no duty to pay the Contractor except on receipt by ODR of: 1) a complete Application for Payment certified by A/E; 2) Contractor's updated Work Progress Schedule; and 3) confirmation that Contractor's record documentation at the Site is kept current.

10.3.1 Payment for stored materials and/or equipment confirmed by Owner and A/E to be on-site or otherwise properly stored is limited to eighty-five (85) percent of the invoice price or eighty-five (85) percent of the scheduled value for the materials or equipment, whichever is less.

10.3.2 Retainage. Owner will withhold from each progress payment, as retainage, five (5) percent of the total earned amount when the contract price estimate is equal to or greater than four hundred thousand dollars ($400,000) and ten (10) percent of the total earned amount when the contract price estimate is less than four hundred thousand dollars ($400,000), the amount authorized by law, or as otherwise set forth in the Contract Documents. Retainage is managed in conformance with Tex. Gov't Code, Ch. 2252, Subch. B.

10.3.2.1 Contractor shall provide written consent of its surety for any request for reduction or release of retainage.

10.3.2.2 At least sixty-five (65) percent of the Contract, or such other discrete Work phase as set forth in Subsection 12.1.6 or Work package delineated in the Contract Documents, must be completed before Owner can consider a retainage reduction or release.

10.3.2.3 Contractor shall not withhold retainage from their Subcontractors and suppliers in amounts that are any percentage greater than that withheld in its Contract with Owner under this subsection, unless otherwise acceptable to Owner.

10.3.3 Price Reduction to Cover Loss. Owner may reduce any Application for Payment, prior to payment to the extent necessary to protect Owner from loss on account of actions of Contractor including, but not limited to, the following:

10.3.3.1 Defective or incomplete Work not remedied;

10.3.3.2 Damage to Work of a separate Contractor;

10.3.3.3 Failure to maintain scheduled progress or reasonable evidence that the Work will not be completed within the Contract Time;

10.3.3.4 Persistent failure to carry out the Work in accordance with the Contract Documents;

10.3.3.5 Reasonable evidence that the Work cannot be completed for the unpaid portion of the Contract Sum;

10.3.3.6 Assessment of fines for violations of prevailing wage rate law; or

10.3.3.7 Failure to include the appropriate amount of retainage for that periodic progress payment.

10.3.4 Title to all material and Work covered by progress payments transfers to Owner upon payment.

10.3.4.1 Transfer of title to Owner does not relieve Contractor and its Subcontractors of the sole responsibility for the care and protection of materials and Work upon which payments have been made until substantial completion, responsibility for the care and protection of materials and Work in areas where punch list items are completed until final completion or the restoration of any damaged Work, or waive the right of Owner to require the fulfillment of all the terms of the Contract.

10.4 Progress Payments. Progress payments to Contractor do not release Contractor or its surety from any obligations under the Contract.

10.4.1 Upon Owner's request, Contractor shall furnish manifest proof of the status of Subcontractor's accounts in a form acceptable to Owner.

10.4.2 Pay estimate certificates must be signed by a corporate officer or a representative duly authorized by Contractor.

10.4.3 Provide copies of bills of lading, invoices, delivery receipts or other evidence of the location and value of such materials in requesting payment for materials.

10.4.4 For purposes of Tex. Gov't Code § 2251.021(a)(2), the date the performance of service is complete is the date when ODR approves the Application for Payment.

10.5 Off-Site Storage. With prior approval by Owner and in the event Contractor elects to store materials at an off-site location, abide by the following conditions, unless otherwise agreed to in writing by Owner.

10.5.1 Store materials in a commercial warehouse meeting the criteria stated below.

10.5.2 Provide insurance coverage adequate not only to cover materials while in storage, but also in transit from the off-site storage areas to the Project Site. Copies of duly authenticated certificates of insurance, made out to insure the State agency which is signatory to the Contract, must be filed with Owner's representative.

10.5.3 Inspection by Owner's representative is allowed at any time. Owner's inspectors must be satisfied with the security, control, maintenance, and preservation measures.

10.5.4 Materials for this Project are physically separated and marked for the Project in a sectioned-off area. Only materials which have been approved through the submittal process are to be considered for payment.

10.5.5 Owner reserves the right to reject materials at any time prior to final acceptance

of the complete Contract if they do not meet Contract requirements regardless of any previous progress payment made.

10.5.6 With each monthly payment estimate, submit a report to ODR and A/E listing the quantities of materials already paid for and still stored in the off-site location.

10.5.7 Make warehouse records, receipts and invoices available to Owner's representatives, upon request, to verify the quantities and their disposition.In the event of Contract termination or default by Contractor, the items in storage off-site, upon which payment has been made, will be promptly turned over to Owner or Owner's agents at a location near the jobsite as directed by ODR. The full provisions of performance and payment bonds on this Project cover the materials off-site in every respect as though they were stored on the Project Site.

10.6 Time for Payment by Contractor Pursuant to Tex. Gov't Code § 2255.022.

10.6.1 Contractor who receives a payment from a governmental entity shall pay Subcontractor the appropriate share of the payment not later than the tenth (10th) day after the date Contractor receives the payment.

10.6.2 The appropriate share is overdue on the eleventh (11th) day after the date Contractor receives the payment.

Article 11. Changes

11.1 Change Orders. A Change Order issued after execution of the Contract is a written order to Contractor, signed by ODR, Contractor, and A/E, authorizing a change in the Work or an adjustment in the Contract Sum or the Contract Time. The Contract Sum and the Contract Time can only be changed by Change Order. A Change Order signed by Contractor indicates his agreement therewith, including the adjustment in the Contract Sum and/or the Contract Time. ODR may issue a written authorization for Contractor to proceed with Work of a Change Order in advance of final execution by all parties in accordance with Section 11.9.

11.1.1 Owner, without invalidating the Contract, may order changes in the Work within the general scope of the Contract consisting of additions, deletions or other revisions, and the Contract Sum and the Contract Time will be adjusted accordingly. All such changes in the Work shall be authorized by Change Order or ULCO, and shall be performed under the applicable conditions of the Contract Documents. If such changes cause an increase or decrease in Contractor's cost of, or time required for, performance of the Contract, an equitable adjustment shall be made and confirmed in writing in a Change Order or a ULCO.

11.1.2 It is recognized by the parties hereto and agreed by them that the Specifications and Drawings may not be complete or free from errors, omissions and imperfections or that they may require changes or additions in order for the

Work to be completed to the satisfaction of Owner and that, accordingly, it is the express intention of the parties, notwithstanding any other provisions in this Contract, that any errors, omissions or imperfections in such Specifications and Drawings, or any changes in or additions to same or to the Work ordered by Owner and any resulting delays in the Work or increases in Contractor's costs and expenses arising out of such errors, shall not constitute or give rise to any claim, demand or cause of action of any nature whatsoever in favor of Contractor, whether for breach of Contract, or otherwise; provided, however, that Owner shall be liable to Contractor for the sum stated to be due Contractor in any Change Order approved and signed by both parties, it being agreed hereby that such sum, together with any extension of time contained in said Change Order, shall constitute full compensation to Contractor for all costs, expenses and damages to Contractor, as permitted under Tex. Gov't Code, Ch. 2260.

11.1.3 Procedures for administration of Change Orders shall be established by Owner and stated in Supplementary General Conditions, Special Conditions, or elsewhere in the Contract Documents.

11.1.4 No verbal order, verbal statement, or verbal direction of Owner or his duly appointed representative shall be treated as a change under this article or entitle Contractor to an adjustment.

11.1.5 Contractor agrees that Owner or any of its duly authorized representatives shall have access and the right to examine any directly pertinent books, documents, papers, and records of Contractor. Further, Contractor agrees to include in all its subcontracts a provision to the effect that Subcontractor agrees that Owner or any of its duly authorized representatives shall have access to and the right to examine any directly pertinent books, documents, papers and records of such Subcontractor relating to any claim arising from the Contract, whether or not the Subcontractor is a party to the claim. The period of access and examination described herein which relates to appeals under the Disputes article of the Contract, litigation, or the settlement of claims arising out of the performance of the Contract shall continue until final disposition of such claims, appeals or litigation.

11.2 Unit Prices. If unit prices are stated in the Contract Documents or subsequently agreed upon, and if the quantities originally contemplated are so changed in a Proposed Change Order that application of the agreed unit prices to the quantities of work proposed will cause substantial inequity to Owner or Contractor, the applicable unit prices shall be equitably adjusted as provided in the Supplementary General Conditions or Special Conditions or as agreed to by the parties and incorporated into a Change Order.

11.3 Claims for Additional Costs.

11.3.1 If Contractor wishes to make a claim for an increase in the Contract Sum not related to a requested change, they shall give Owner and A/E written notice thereof within twenty-one (21) days after the occurrence of the event giving

rise to such claim, but, in any case before proceeding to execute the Work considered to be additional cost or time, except in an emergency endangering life or property in which case Contractor shall act in accordance with Subsection 7.2.1. No such claim shall be valid unless so made. If Owner and Contractor cannot agree on the amount of the adjustment in the Contract Sum, it shall be determined as set forth under Article 15. Any change in the Contract Sum resulting from such claim shall be authorized by a Change Order or a ULCO.

11.3.2 If Contractor claims that additional cost is involved because of, but not limited to, 1) any written interpretation of the Contract Documents, 2) any order by Owner to stop the Work pursuant to Article 14 where Contractor was not at fault, or 3) any written order for a minor change in the Work issued pursuant to Section 11.4, Contractor shall make such claim as provided in Subsection 11.3.1.

11.3.3 Should Contractor or his Subcontractors fail to call attention of A/E to discrepancies or omissions in the Contract Documents, but claim additional costs for corrective Work after Contract award, Owner may assume intent to circumvent competitive bidding for necessary corrective Work. In such case, Owner may choose to let a separate Contract for the corrective Work, or issue a ULCO to require performance by Contractor. Claims for time extensions or for extra cost resulting from delayed notice of patent Contract Document discrepancies or omissions will not be considered by Owner.

11.4 Minor Changes. A/E, with concurrence of ODR, will have authority to order minor changes in the Work not involving an adjustment in the Contract Sum or an extension of the Contract Time. Such changes shall be effected by written order which Contractor shall carry out promptly and record on as-built record documents.

11.5 Concealed Site Conditions. Contractor is responsible for visiting the Site and being familiar with local conditions such as the location, accessibility, and general character of the Site and/or building. If, in the performance of the Contract, subsurface, latent, or concealed conditions at the Site are found to be materially different from the information included in the Contract Documents, or if unknown conditions of an unusual nature are disclosed differing materially from the conditions usually inherent in Work of the character shown and specified, ODR and A/E shall be notified in writing of such conditions before they are further disturbed or subsequent related work proceeds. Upon such notice, or upon its own observation of such conditions, A/E, with the approval of ODR, will promptly make such changes in the Drawings and Specifications as they deem necessary to conform to the different conditions, and any increase or decrease in the cost of the Work, or in the time within which the Work is to be completed, resulting from such changes will be adjusted by Change Order, subject to the prior approval of ODR.

11.6 Extension of Time. All changes to the Contract Time shall be made as a consequence of requests as required under Section 9.6, and as documented by Change Order as provided under Section 11.1.

11.7 Administration of Change Order Requests. All changes in the Contract shall be

administered in accordance with procedures approved by Owner, and when required, make use of such electronic information management system(s) as Owner may employ.

11.7.1 Routine changes in the construction Contract shall be formally initiated by A/E by means of a PCO form detailing requirements of the proposed change for pricing by Contractor. This action may be preceded by communications between Contractor, A/E and ODR concerning the need and nature of the change, but such communications shall not constitute a basis for beginning the proposed Work by Contractor. Except for emergency conditions described below, approval of Contractor's cost proposal by A/E and ODR will be required for authorization to proceed with the Work being changed. Owner will not be responsible for the cost of Work changed without prior approval and Contractor may be required to remove Work so installed.

11.7.2 All proposed costs for change order Work must be supported by itemized accounting of material, equipment and associated itemized installation costs in sufficient detail, following the outline and organization of the establish Schedule of Values, to permit analysis by A/E and ODR using current estimating guides and/or practices. Photocopies of Subcontractor and vendor proposals shall be furnished. Contractor shall provide written response to a change request within twenty-one (21) days of receipt.

11.7.3 Any unexpected circumstance which necessitates an immediate change in order to avoid a delay in progress of the Work may be expedited by verbal communication and authorization between Contractor and Owner, with written confirmation following within twenty-four (24) hours. A limited scope not-to-exceed estimate of cost and time will be requested prior to authorizing Work to proceed. Should the estimate be impractical for any reason, ODR may authorize the use of detailed cost records of such work to establish and confirm the actual costs and time for documentation in a formal Change Order.

11.7.4 Emergency changes to save life or property may be initiated by Contractor alone (see Section 7.3) with the claimed cost and/or time of such work to be fully documented as to necessity and detail of the reported costs and/or time.

11.7.5 The method of incorporating approved Change Orders into the parameters of the accepted Schedule of Values must be coordinated and administered in a manner acceptable to ODR.

11.8 Pricing Change Order Work. Contractor will be entitled to mark-up the costs of change orders in an amount equal to the agreed upon fee as stated in the Contract. The following percentage amounts are the maximum amounts the Contractor's subcontractors will be allowed to add to the net additive amount or net deductive amount of the change orders:

11.8.1 For Work performed by its forces, Contractor will be allowed their actual costs for materials, the total amount of wages (including benefits) paid for labor, plus the total cost of State and Federal payroll taxes and of worker's compensation

and comprehensive general liability insurance, plus additional bond and builders risk insurance cost if the change results in an increase in the premium paid by Contractor. To the total of the above costs, Contractor will be allowed to add a percentage as noted below to cover overhead and profit combined. Allowable percentages for overhead and profit on any specific change shall not exceed twelve (12) percent for the first $10,000 of value for self-performed work or portion thereof, ten (10) percent for the second $10,000 of value for self-performed work or portion thereof and seven and a half (7.5) percent for any value of the self-performed work that exceeds $20,000.

11.8.2 When change order work is performed by a subcontractor or subcontractors working for the Subcontractor, each affected Subcontractor shall figure its costs, overhead and profit as described below for subcontractor's self-performed Work. All Subcontractor costs shall be combined, and to that total Subcontractor cost Contractor will be allowed to add a maximum mark-up of ten (10) percent for the first $10,000 of subcontracted Work value or portion thereof, seven and half (7.5) percent for the second $10,000 of subcontracted Work value or portion thereof, and five (5) percent for any value of the subcontracted Work exceeding $20,000.

11.8.3 On changes involving both additions and deletions, percentages for overhead and profit as stated in 11.8, 11.8.1, and 11.8.2 will be computed in the same manner on the net addition or the net deduction of any change order amount. Owner does not accept and will not pay for additional Contract cost identified as indirect or consequential damages.

11.8.4 For Contracts based on a Guaranteed Maximum Price (GMP), the Construction Manager-at-Risk or Design Builder shall NOT be entitled to a percentage mark-up on any Change Order Work unless the Change Order increases the Guaranteed Maximum Price.

11.8.5 It is understood that these contract provisions will govern the pricing and administration of all change order proposals to be submitted by Contractor and/or all other lower-tier subcontractors (all referred to as "Subcontractors"). Contractor agrees that it will incorporate the provisions of this Article 11.8.5 into all agreements with lower tier Subcontractors who will also include these change order pricing requirements into agreements with all lower tier subcontractors, etc. It is understood that these change order pricing provisions apply to all types of contracts and/or subcontracts specifically including lump sum (or fixed price contracts), unit price contracts. It is further understood that these change order provisions will apply to all methods of change order pricing specifically including lump sum change order proposals, unit price change order proposals, and cost-plus Fee change order proposals. Whenever change order proposals to adjust the contract price become necessary, Owner will have the right to select the method of pricing to be used by Subcontractor in accordance with these pricing provisions. The options will be (1) lump sum change order proposal, (2) unit price change order proposals, or (3) cost plus Fee change order proposal as defined in the following provisions:

11.8.5.1 Lump Sum Change Order Proposals: Subcontractor will submit a property itemized Lump Sum Change Order Proposal covering the additional work and/or the work to be deleted. This proposal will be itemized for the various components of work and segregated by labor, material, and equipment in a detailed format satisfactory to Owner. Owner will require itemized change orders on all change order proposals from the Subcontractor, regardless of tier. Details to be submitted will include detailed line item estimates showing detailed materials quantity take-offs, material prices by item and related labor hour pricing information and extensions (by line item or by drawing as applicable).

11.8.5.2 Labor: Estimated labor costs to be included for self-performed work shall be based on the actual cost per hour paid by the Subcontractor for those workers or crews of workers who the subcontractor reasonably anticipates will perform the change order work. Estimated labor hours shall include hours only for those workmen and working foremen directly involved in performing the change order work. Supervision above the level of working foremen (such as general foremen, non-working foremen, superintendent, project manager, etc.) is considered to be included in the Markup Percentages as outlined in this Article 11.8. Note: No separate allowances for warranty or safety expenses will be allowed as a direct cost of a change order. Costs attributed to warranty expenses and safety expense will be considered to be covered by the Markup Percentages of this Article 11.8.

11.8.5.3 Labor Burden: Labor burden allowable in change orders shall be defined as employer's net actual cost of payroll taxes (FICA, Medicare, SUTA, FUTA), net actual cost for employer's cost of union benefits (or other usual and customary fringe benefits if the employees are not union employees), and net actual cost to employer for worker's compensation insurance taking into consideration adjustments for experience modifiers, premium discounts, dividends, rebates, expense constants, assigned risk pool costs, net cost reductions due to policies with deductibles for self-insured losses, assigned risk rebates, etc. Subcontractor shall reduce their standard payroll tax percentages to properly reflect the effective cost reduction due to the estimated impact of the annual maximum wages subject to payroll taxes. (An estimated percentage for labor burden may be used for pricing change orders. However, the percentage used for labor burden to price change orders will be examined at the conclusion of the project and an adjustment to the approved change orders will be processed if it is determined that the actual labor burden percentage should have been more or less than the estimated percentage used.)

11.8.5.4 Non-Reimbursable Labor Burden: Employee Stock Ownership Plan (ESOP) related fringe benefit costs are specifically considered non-reimbursable labor burden and any ESOP costs are considered covered by the allowable change order markups to cover overhead and profit.

11.8.5.5 Material: Estimated material change order costs shall reflect the Subcontractor's reasonably anticipated net actual cost for the purchase of the material needed for the change order work. Estimated material costs shall reflect

cost reductions available to the Contractor due to “non-Cash” discounts, trade discounts, free material credits, and/or volume rebates. “Cash” discounts (i.e. prompt payment discounts of 1.5% or less) available on material purchased for change order work shall be credited to Owner if the Subcontractor is provided Owner funds in time for Subcontractor to take advantage of any such “cash” discounts. Price quotations from material suppliers must be itemized with unit prices for each specific item to be purchased. "Lot pricing" quotations will not be considered sufficient substantiating detail.

11.8.5.6 Equipment: Allowable change order estimated costs may include appropriate amounts for rental of major equipment specifically needed to perform the change order work (defined as tools and equipment with an individual purchase cost of more than $750). For subcontractor owned equipment, the "bare" equipment rental rates allowed to be used for pricing change order proposals shall be 75% of the monthly rate listed in the most current publication of The AED Green Book divided by 173.3 to arrive at a maximum hourly rate to be applied to the hours the equipment is used performing the change order work. Further, for subcontractor owned equipment the aggregate equipment rent charges for any single piece of equipment used in all change order work shall be limited to 50% of the fair market value of the piece of equipment when the first change order is priced involving usage of the piece of equipment. Fuel necessary to operate the equipment will be considered as a separate direct cost associated with the change order work.

11.8.5.7 No Markup on Bonds and Liability Insurance Costs: Change Order cost adjustments due increases or decreases in bond or insurance costs (if applicable) shall not be subject to any Markup Percentage Fee.

11.8.5.8 Direct and Indirect Costs Covered by Markup Percentages: As a further clarification, the agreed upon Markup Percentage Fee is intended to cover the Subcontractor's profit and all indirect costs associated with the change order work. Items intended to be covered by the Markup Percentage Fee include, but are not limited to: home office expenses, branch office and field office overhead expense of any kind; project management; superintendents, general foremen; non-working foremen, estimating, engineering; coordinating; expediting; purchasing; detailing; legal, accounting, data processing or other administrative expenses; shop drawings; permits; auto insurance and umbrella insurance; pick-up truck costs; ESOP related costs; and warranty expense costs. The cost for the use of small tools is also to be considered covered by the Markup Percentage Fee. Small tools shall be defined as tools and equipment (power or non-power) with an individual purchase cost of less than $750.

11.8.5.9 Contingency: In no event will any lump sum or percentage amounts for "contingency" be allowed to be added as a separate line item in change order estimates. Unknowns attributable to labor hours will be accounted for when estimating labor hours anticipated to perform the work. Unknowns attributable to material scrap and waste will be estimated as part of material costs.

11.8.5.10 General Liability Insurance and Bonds: In the event the Subcontractor has been required to furnish comprehensive general liability insurance and/or performance and/or payment bonds as part of the base contract price, a final contract change order will be processed to account for the Subcontractor's net increase or decrease in comprehensive general liability insurance costs and/or net bond premium costs associated with change orders to Subcontractor's base contract price. Note: If a change order or a separate payment is made to reimburse the Subcontractor for the cost of a Performance and/or Payment Bond, the Subcontractor will be required to remit any bond dividend or rebate that it will receive from the Surety after the successful completion of the project.

11.8.5.11 Unit Price Change Order Proposals: As an alternative to Lump Sum Change Order Proposals, Owner or the Contractor acting with the approval of Owner may choose the option to use Contract Unit Prices. Agreed upon Contract Unit Prices shall be the same for added quantities and deductive quantities. Unit Prices are not required to be used for pricing change orders where other methods of pricing change order work are more equitable.

11.8.5.12 Subcontractor will submit, within seven (7) days after receipt of Owner's written request for a Unit Price Proposal, a written Unit Price proposal itemizing the quantities of each item of work for which there is an applicable Contract Unit Price. The quantities must be itemized in relation to each specific contract drawing.

11.8.5.13 Contract Unit Prices will be applied to net differences of quantities of the same item. Such Contract Unit Prices will be considered to cover all direct and indirect costs of furnishing and installing the item including the subcontractor's Markup Percentage Fee.

11.8.5.14 Cost Plus Change Order Proposals: As an alternative to either Lump Sum Change Order Proposals or Unit Price Change Order Proposals, Owner may elect to have any extra work performed on a cost-plus markup percentage fee basis. Upon written notice to proceed, Contractor and/or Subcontractors shall perform such authorized extra work at actual cost for direct labor (working foremen, journeymen, apprentices, helpers, etc.), actual cost of labor burden, actual cost of material used to perform the extra work, and actual cost of rental of major equipment (without any charge for administration, clerical expense, general supervision or superintendent of any nature whatsoever, including general foremen, or the cost or rental of small tools, minor equipment, or plant) plus the approved Markup Percentage Fee. The intent of this clause is to define allowable cost plus chargeable costs to be the same as those allowable when pricing Lump Sum Change. Owner and Subcontractor may agree in advance in writing on a maximum price for this work and Owner shall not be liable for any charge in excess of the maximum. Daily time sheets with names of all Contractor and/or Subcontractor employees working on the project will be required to be submitted to Owner for both labor and equipment used for time periods during which extra work is performed on a cost plus fee basis. Daily time sheets will break down the paid hours worked

by the Contractor and/or Subcontractor employees showing both base contract work as well as extra work performed by each employee.

11.8.5.15 Accurate Change Order Pricing Information: Contractor (subcontractor or sub-subcontractor) agrees that it is responsible for submitting accurate cost and pricing data to support its Lump Sum Change and/or Cost plus Change Order Proposals or other contract price adjustments under the Contract. Contractor further agrees to submit change order proposals with cost and pricing data which is accurate, complete, current, and in accordance with the terms of the contract with respect to pricing of change orders. Contractor agrees that any "buy-out savings" on change orders shall accrue 100% to Owner. "Buy-out savings" are defined as any savings negotiated by the Contractor with a subcontractor or a material supplier after receiving approval of a change order amount that was designated to be paid to a specific subcontractor or supplier for the approved change order work.

11.8.5.16 Right to Verify Change Order Pricing Information: Contractor, subcontractor and sub-sub-contractor agrees that any designated Owner's representative will have the right to examine (copy or scan) the records of the Contractor, subcontractor or sub-sub contractor's records (during the contract period and up to three years after final payment is made on the contract) to verify the accuracy and appropriateness of the pricing data used to price all change order proposals and/or claims. Contractor agrees that if Owner determines the cost and pricing data submitted (whether approved or not) was inaccurate, incomplete, not current, or not in compliance with the terms of the contract regarding pricing of change orders, an appropriate contract price adjustment will be made. Such post-approval contract price adjustments will apply to all levels of contractors and/or subcontractors and to all types of change order proposals specifically including lump sum change orders, unit price change orders, and cost-plus change orders.

11.8.5.17 Requirements for Detailed Change Order Pricing Information: Contractor, subcontractor agrees to provide and require all Subcontractors and sub-subcontractors to provide a breakdown of allowable labor and labor burden cost information. This information will be used to evaluate the potential cost of labor and labor burden related to change order work. It is intended that this information represent an accurate estimate of the Contractor's actual labor and labor burden cost components. This information is not intended to establish fixed billing or change order pricing labor rates. However, at the time change orders are priced, the submitted cost data for labor rates may be used to price change order work. The accuracy of any such agreed upon labor cost components used to price change orders will be subject to later audit. Approved change order amounts may be adjusted later to correct the impact of inaccurate labor cost components if the agreed upon labor cost components are determined to be inaccurate.

11.8.5.18 Discounts: If a Contractor enters into an agreement to pay a subcontractor before they receive payment by the Owner and in return they negotiate an early payment discount, the amount of any such discount that the

contractor is allowed to keep as a "cash discount earned" will be limited to one and ½ percent (1.5%) of the costs subject to discount. Any percentage of discount greater than one and ½ percent (1.5%) shall be credited to Owner as a reduction to the reimbursable Cost of Work and a credit to trade contracts or material purchases, and change orders as applicable.

11.9 Unilateral Change Order (ULCO). Owner may issue a written ULCO directing a change in the Work prior to reaching agreement with Contractor on the adjustment, if any, in the Contract price and/or the Contract Time.

11.9.1 Owner and Contractor shall negotiate for appropriate adjustments, as applicable, to the Contract Sum or the Contract Time arising out of a ULCO. As the changed Work is performed, Contractor shall submit its costs for such Work with its Application for Payment beginning with the next Application for Payment within thirty (30) days of the issuance of the ULCO. The Parties reserve their rights as to the disputed amount, subject to Article 15.

11.10 Final Resolution of Changes. Upon execution of a Change Order and/or a ULCO by Owner, Contractor and A/E, all costs and time issues regarding that change are final and not subject to additive adjustments unless the adjustments are the results of Owner's audit of change order pricing in accordance with the provisions included in Article 11.8.5.

Article 12. Project Completion and Acceptance

12.1 Closing Inspections.

12.1.1 Substantial Completion Inspection. When Contractor considers the entire Work or part thereof Substantially Complete, it shall notify ODR in writing that the Work will be ready for Substantial Completion inspection on a specific date. Contractor shall include with this notice Contractor's Punchlist to indicate that it has previously inspected all the Work associated with the request for inspection, noting items it has corrected and including all remaining work items with date scheduled for completion or correction prior to final inspection. The failure to include any items on this list does not alter the responsibility of Contractor to complete all Work in accordance with the Contract Documents. If any of the items on this list prevents the Project from being used as intended, Contractor shall not request a Substantial Completion Inspection. Owner and its representatives will review the list of items and schedule the requested inspection, or inform Contractor in writing that such an inspection is premature because the Work is not sufficiently advanced or conditions are not as represented on Contractor's list.

12.1.1.1 Prior to the Substantial Completion inspection, Contractor shall furnish a copy of its marked-up Record Documents and a preliminary copy of each instructional manual, maintenance and operating manual, parts catalog, wiring diagrams, spare parts, specified written warranties, and like publications or parts for all installed equipment,

systems, and like items as described in the Contract Documents. Delivery of these items is a prerequisite for requesting the Substantial Completion inspection.

12.1.1.2 On the date requested by Contractor, or as mutually agreed upon pending the status of the Open Items List, A/E, ODR, Contractor, and other Owner representatives as determined by Owner will jointly attend the Substantial Completion inspection, which shall be conducted by ODR or their delegate. If ODR determines that the Work is Substantially Complete, ODR will issue a Certificate of Substantial Completion to be signed by A/E, Owner, and Contractor establishing the date of Substantial Completion and identifying responsibilities for security, maintenance, insurance and utilities. A/E will provide with this certificate a consolidated list of Punchlist items (the pre-final Punchlist including all items noted by the various inspecting parties) for completion prior to final inspection. This list may include items in addition to those on Contractor's Punchlist, which the inspection team deems necessary to correct or complete prior to final inspection. The failure to include any items on this list does not alter the responsibility of Contractor to complete all Work in accordance with the Contract Documents. If Owner occupies the Project upon determination of Substantial Completion, Contractor shall complete all corrective Work at the convenience of Owner, without disruption to Owner's use of the Project for its intended purposes.

12.1.2 Final Inspection. Contractor shall complete the list of items identified on the pre-final Punchlist prior to requesting a final inspection. Unless otherwise specified, or otherwise agreed in writing by the parties as documented on the Certificate of Substantial Completion, Contractor shall complete and/or correct all Work within thirty (30) days of the Substantial Completion date. Upon completion of the pre-final Punchlist work, Contractor shall give written notice to ODR and A/E that the Work will be ready for final inspection on a specific date. Contractor shall accompany this notice with a copy of the updated pre-final Punchlist indicating resolution of all items. On the date specified or as soon thereafter as is practicable, ODR, A/E and Contractor will inspect the Work. A/E will submit to Contractor a final Punchlist of open items that the inspection team requires corrected or completed before final acceptance of the Work.

12.1.2.1 Correct or complete all items on the final Punchlist before requesting Final Payment. Unless otherwise agreed to in writing by the parties, complete this work within seven (7) days of receiving the final Punchlist. Upon completion of the final Punchlist, notify A/E and ODR in writing stating the disposition of each final Punchlist item. A/E, Owner, and Contractor shall promptly inspect the completed items. When the final Punchlist is complete, and the Contract is fully satisfied according to the Contract Documents ODR will issue a certificate establishing the date of Final Completion. Completion of

all Work is a condition precedent to Contractor's right to receive Final Payment.

12.1.3 Annotation. Any Certificate issued under this Article may be annotated to indicate that it is not applicable to specified portions of the Work, or that it is subject to any limitation as determined by Owner.

12.1.4 Purpose of Inspection. Inspection is for determining the completion of the Work, and does not relieve Contractor of its overall responsibility for completing the Work in a good and competent fashion, in compliance with the Contract. Work accepted with incomplete Punchlist items or failure of Owner or other parties to identify Work that does not comply with the Contract Documents or is defective in operation or workmanship does not constitute a waiver of Owner's rights under the Contract or relieve Contractor of its responsibility for performance or warranties.

12.1.5 Additional Inspections.

12.1.5.1 If Owner's inspection team determines that the Work is not substantially complete at the Substantial Completion inspection, ODR or A/E will give Contractor written notice listing cause(s) of the rejection. Contractor will set a time for completion of incomplete or defective work acceptable to ODR. Contractor shall complete or correct all work so designated prior to requesting a second Substantial Completion inspection.

12.1.5.2 If Owner's inspection team determines that the Work is not complete at the final inspection, ODR or A/E will give Contractor written notice listing the cause(s) of the rejection. Contractor will set a time for completion of incomplete or defective work acceptable to ODR. Contractor shall complete or correct all Work so designated prior to again requesting a final inspection.

12.1.5.3 The Contract contemplates three (3) comprehensive inspections: the Substantial Completion inspection, the Final Completion inspection, and the inspection of completed final Punchlist items. The cost to Owner of additional inspections resulting from the Work not being ready for one or more of these inspections is the responsibility of Contractor. Owner may issue a ULCO deducting these costs from Final Payment. Upon Contractor's written request, Owner will furnish documentation of any costs so deducted. Work added to the Contract by Change Order after Substantial Completion inspection is not corrective Work for purposes of determining timely completion, or assessing the cost of additional inspections.

12.1.6 Phased Completion. The Contract may provide, or Project conditions may warrant, as determined by ODR, that designated elements or parts of the Work be completed in phases. Where phased completion is required or specifically agreed to by the parties, the provisions of the Contract related to closing inspections, occupancy, and acceptance apply independently to each

designated element or part of the Work. For all other purposes, unless otherwise agreed by the parties in writing, Substantial Completion of the Work as a whole is the date on which the last element or part of the Work completed receives a Substantial Completion certificate.

Final Completion of the Work as a whole is the date on which the last element or part of the Work completed receives a Final Completion certificate.

12.2 Owner's Right of Occupancy. Owner may occupy or use all or any portion of the Work following Substantial Completion, or at any earlier stage of completion. Should Owner wish to use or occupy the Work, or part thereof, prior to Substantial Completion, ODR will notify Contractor in writing and identify responsibilities for security, maintenance, insurance and utilities. Work performed on the premises by third parties on Owner's behalf does not constitute occupation or use of the Work by Owner for purposes of this Article. All Work performed by Contractor after occupancy, whether in part or in whole, shall be at the convenience of Owner so as to not disrupt Owner's use of, or access to occupied areas of the Project.

12.3 Acceptance and Payment

12.3.1 Request for Final Payment. Following the certified completion of all work, including all final Punchlist items, cleanup, and the delivery of record documents, Contractor shall submit a certified Application for Final Payment and include all sums held as retainage and forward to A/E and ODR for review and approval.

12.3.2 Final Payment Documentation. Contractor shall submit, prior to or with the Application for Final Payment, final copies of all close out documents, maintenance and operating instructions, guarantees and warranties, certificates, Record Documents and all other items required by the Contract.

Contractor shall submit evidence of return of access keys and cards, evidence of delivery to Owner of attic stock, spare parts, and other specified materials. Contractor shall submit consent of surety to Final Payment form and an affidavit that all payrolls, bills for materials and equipment, subcontracted work and other indebtedness connected with the Work, except as specifically noted, are paid, will be paid, after payment from Owner or otherwise satisfied within the period of time required by Tex. Gov't Code, Ch. 2251. Contractor shall furnish documentation establishing payment or satisfaction of all such obligations, such as receipts, releases and waivers of claims and liens arising out of the Contract. Contractor may not subsequently submit a claim on behalf of Subcontractor or vendor unless Contractor's affidavit notes that claim as an exception.

12.3.3 Architect/Engineer Approval. A/E will review a submitted Application for Final Payment promptly but in no event later than ten (10) days after its receipt. Prior to the expiration of this deadline, A/E will either: 1) return the Application for Final Payment to Contractor with corrections for action and resubmission; or 2) accept it, note their approval, and send to Owner.

12.3.4 Offsets and Deductions. Owner may deduct from the Final Payment all

sums due from Contractor. If the Certificate of Final Completion notes any Work remaining, incomplete, or defects not remedied, Owner may deduct the cost of remedying such deficiencies from the Final Payment. On such deductions, Owner will identify each deduction, the amount, and the explanation of the deduction on or by the twenty-first (21st) day after Owner's receipt of an approved Application for Final Payment. Such offsets and deductions shall be incorporated via a final Change Order, including a ULCO as may be applicable.

12.3.5 Final Payment Due. Final Payment is due and payable by Owner, subject to all allowable offsets and deductions, on the thirtieth (30th) day following Owner's approval of the Application for Payment. If Contractor disputes any amount deducted by Owner, Contractor shall give notice of the dispute on or before the thirtieth (30th) day following receipt of Final Payment. Failure to do so will bar any subsequent claim for payment of amounts deducted.

12.3.6 Effect of Final Payment. Final Payment constitutes a waiver of all claims by Owner, relating to the condition of the Work except those arising from:

12.3.6.1 Faulty or defective Work appearing after Substantial Completion (latent defects);

12.3.6.2 Failure of the Work to comply with the requirements of the Contract Documents;

12.3.6.3 Terms of any warranties required by the Contract, or implied by law; or

12.3.6.4 Claims arising from personal injury or property damage to third parties.

12.3.7 Waiver of Claims. Final payment constitutes a waiver of all claims and liens by Contractor except those specifically identified in writing and submitted to ODR prior to the application for Final Payment.

12.3.8 Effect on Warranty. Regardless of approval and issuance of Final Payment, the Contract is not deemed fully performed by Contractor and closed until the expiration of all warranty periods. Issuance of Final Payment does not alter Contractor's contractual obligations during the warranty period.

Article 13. Warranty and Guarantee

13.1 Contractor's General Warranty and Guarantee. Contractor warrants to Owner that all Work is executed in accordance with the Contract, complete in all parts and in accordance with approved practices and customs, and of the required finish and workmanship. Contractor further warrants that unless otherwise specified, all materials and equipment incorporated in the Work under the Contract are new. Owner may, at its option, agree in writing to waive any failure of the Work to conform to the Contract,

and to accept a reduction in the Contract price for the cost of repair or diminution in value of the Work by reason of such defect. Absent such a written agreement, Contractor's obligation to perform and complete the Work in accordance with the Contract Documents is absolute and is not waived by any inspection or observation by Owner, A/E or others, by making any progress payment or final payment, by the use or occupancy of the Work or any portion thereof by Owner, at any time, or by any repair or correction of such defect made by Owner.

13.2 Warranty Period. Except as may be otherwise specified or agreed, Contractor shall repair all defects in materials, equipment, or workmanship appearing within one year from the date of Substantial Completion of the Work. If Substantial Completion occurs by phase, then the warranty period for that particular Work begins on the date of such occurrence, or as otherwise stipulated on the Certificate of Substantial Completion for the particular Work.

13.3 Limits on Warranty. Contractor's warranty and guarantee hereunder excludes defects or damage caused by:

13.3.1 Modification or improper maintenance or operation by persons other than Contractor, Subcontractors, or any other individual or entity for whom Contractor is not responsible, unless Owner is compelled to undertake maintenance or operation due to the neglect of Contractor.

13.3.2 Normal wear and tear under normal usage after acceptance of the Work by Owner.

13.4 Events Not Affecting Warranty. Contractor's obligation to perform and complete the Work in a good and workmanlike manner in accordance with the Contract Documents is absolute. None of the following will constitute an acceptance of defective Work that is not in accordance with the Contract Documents or a release of Contractor's obligation to perform the Work in accordance with the Contract Documents:

13.4.1 Observations by Owner and/or A/E;

13.4.2 Recommendation to pay any progress or final payment by A/E;

13.4.3 The issuance of a certificate of Substantial Completion or any payment by Owner to Contractor under the Contract Documents;

13.4.4 Use or occupancy of the Work or any part thereof by Owner**;**

13.4.5 Any acceptance by Owner or any failure to do so;

13.4.6 Any review of a Shop Drawing or sample submittal; or

13.4.7 Any inspection, test or approval by others.

13.5 Separate Warranties. If a particular piece of equipment or component of the Work for which the Contract requires a separate warranty is placed in continuous service

before Substantial Completion, the warranty period for that equipment or component will not begin until Substantial Completion, regardless of any warranty agreements in place between suppliers and/or Subcontractors and Contractor. ODR will certify the date of service commencement in the Substantial Completion certificate.

13.5.1 In addition to Contractor's warranty and duty to repair, Contractor expressly assumes all warranty obligations required under the Contract for specific building components, systems and equipment.

13.5.2 Contractor may satisfy any such obligation by obtaining and assigning to Owner a complying warranty from a manufacturer, supplier, or Subcontractor. Where an assigned warranty is tendered and accepted by Owner which does not fully comply with the requirements of the Contract, Contractor remains liable to Owner on all elements of the required warranty not provided by the assigned warranty.

13.6 Correction of Defects. Upon receipt of written notice from Owner, or any agent of Owner designated as responsible for management of the warranty period, of the discovery of a defect, Contractor shall promptly remedy the defect(s), and provide written notice to Owner and designated agent indicating action taken. In case of emergency where delay would cause serious risk of loss or damage to Owner, or if Contractor fails to remedy within thirty (30) days, or within another period agreed to in writing, Owner may correct the defect and be reimbursed the cost of remedying the defect from Contractor or its surety.

13.7 Certification of No Asbestos Containing Materials or Work. Contractor shall ensure compliance with the Asbestos Hazard Emergency Response Act (AHERA– 40 C.F.R § 763-99(7)) from all Subcontractors and materials suppliers, and shall provide a notarized certification to Owner that all equipment and materials used in fulfillment of their Contract responsibilities are non-Asbestos Containing Building Materials (ACBM). This certification must be provided no later than Contractor's application for Final Payment.

13.8 Material Safety Data Sheet. Contractor shall submit Material Safety Data Sheets (MSDS) for all products used in the project. These MSDS must be provided no later than Contractor's application for Final Payment.

Article 14. Suspension and Termination

14.1 Suspension of Work for Cause. Owner may, at any time without prior notice, suspend all or any part of the Work, if after reasonable observation and/or investigation, Owner determines it is necessary to do so to prevent or correct any condition of the Work, which constitutes an immediate safety hazard, or which may reasonably be expected to impair the integrity, usefulness or longevity of the Work when completed.

14.1.1 Owner will give Contractor a written notice of suspension for cause, setting forth the reason for the suspension and identifying the Work suspended. Upon receipt of such notice, Contractor shall immediately stop the Work so identified. As soon as practicable following the issuance of such a notice, Owner will initiate and complete a further investigation of the circumstances giving rise to

the suspension, and issue a written determination of the findings.

14.1.2 If it is confirmed that the cause was within the control of Contractor, Contractor will not be entitled to an extension of time or any compensation for delay resulting from the suspension. If the cause is determined not to have been within the control of Contractor, and the suspension has prevented Contractor from completing the Work within the Contract Time, the suspension is an excusable delay and a time extension will be granted through a Change Order.

14.1.3 Suspension of Work under this provision will be no longer than is reasonably necessary to remedy the conditions giving rise to the suspension.

14.2 Suspension of Work for Owner's Convenience. Upon seven (7) days written notice to Contractor, Owner may at any time without breach of the Contract suspend all or any portion of the Work for a period of up to thirty (30) days for its own convenience. Owner will give Contractor a written notice of suspension for convenience, which sets forth the number of suspension days for which the Work, or any portion of it, and the date on which the suspension of Work will cease. When such a suspension prevents Contractor from completing the Work within the Contract Time, it is an excusable delay. A notice of suspension for convenience may be modified by Owner at any time on seven (7) days written notice to Contractor. If Owner suspends the Work for its convenience for more than sixty (60) consecutive days, Contractor may elect to terminate the Contract pursuant to the provisions of the Contract.

14.3 Termination by Owner for Cause.

14.3.1 Upon written notice to Contractor and its surety, Owner may, without prejudice to any right or remedy, terminate the Contract and take possession of the Site and of all materials, equipment, tools, construction equipment, and machinery thereon owned by Contractor under any of the following circumstances:

14.3.1.1 Persistent or repeated failure or refusal, except during complete or partial suspensions of work authorized under the Contract, to supply enough properly skilled workmen or proper materials;

14.3.1.2 Persistent disregard of laws, ordinances, rules, regulations or orders of any public authority having jurisdiction, including ODR;

14.3.1.3 Persistent failure to prosecute the Work in accordance with the Contract, and to ensure its completion within the time, or any approved extension thereof, specified in the Contract;

14.3.1.4 Failure to remedy defective work condemned by ODR;

14.3.1.5 Failure to pay Subcontractors, laborers, and material suppliers pursuant to Tex. Gov't Code, Ch. 2251;

14.3.1.6 Persistent endangerment to the safety of labor or of the Work;

14.3.1.7 Failure to supply or maintain statutory bonds or to maintain required insurance, pursuant to the Contract;

14.3.1.8 Any material breach of the Contract; or

14.3.1.9 Contractor's insolvency, bankruptcy, or demonstrated financial inability to perform the Work.

14.3.2 Failure by Owner to exercise the right to terminate in any instance is not a waiver of the right to do so in any other instance.

14.3.3 Should Owner decide to terminate the Contract under the provisions of Section 14.3, it will provide to Contractor and its surety thirty (30) days prior written notice.

14.3.4 Should Contractor or its surety, after having received notice of termination, demonstrate to the satisfaction of Owner that Contractor or its surety are proceeding to correct such default with diligence and promptness, upon which the notice of termination was based, the notice of termination may be rescinded in writing by Owner. If so rescinded, the Work may continue without an extension of time. If Contractor or its surety fails, after written notice from Owner to commence and continue correction of such default with diligence and promptness to the satisfaction of Owner within thirty (30) days following receipt of notice, Owner may arrange for completion of the Work and deduct the cost of completion from the unpaid Contract Sum.

14.3.4.1 This amount includes the cost of additional Owner costs such as A/E services, other consultants, and contract administration.

14.3.4.2 Owner will make no further payment to Contractor or its surety unless the costs to complete the Work are less than the Contract balance, then the difference shall be paid to Contractor or its surety. If such costs exceed the unpaid balance, Contractor or its surety will pay the difference to Owner.

14.3.4.3 This obligation for payment survives the termination of the Contract.

14.3.4.4 Owner reserves the right in termination for cause to take assignment of all the Contracts between Contractor and its Subcontractors, vendors, and suppliers. ODR will promptly notify Contractor of the contracts Owner elects to assume. Upon receipt of such notice, Contractor shall promptly take all steps necessary to effect such assignment.

14.4 Conversion to Termination for Convenience. In the event that any termination of Contractor for cause under Section 14.3 is later determined to have been improper, the termination shall automatically convert to a termination for convenience under Section 14.5 and Contractor's recovery for termination shall be strictly limited to the payments

allowable under Section 14.5.

14.5 Termination for Convenience of Owner. Owner reserves the right, without breach, to terminate the Contract prior to, or during the performance of the Work, for any reason. Upon such an occurrence, the following shall apply:

14.5.1 Owner will immediately notify Contractor and A/E in writing, specifying the reason for and the effective date of the Contract termination. Such notice may also contain instructions necessary for the protection, storage or decommissioning of incomplete work or systems, and for safety.

14.5.2 Upon receipt of the notice of termination, Contractor shall immediately proceed with the following obligations, regardless of any delay in determining or adjusting any amounts due at that point in the Contract:

14.5.2.1 Stop all work.

14.5.2.2 Place no further subcontracts or orders for materials or services.

14.5.2.3 Terminate all subcontracts for convenience.

14.5.2.4 Cancel all materials and equipment orders as applicable.

14.5.2.5 Take action that is necessary to protect and preserve all property related to the Contract which is in the possession of Contractor.

14.5.3 When the Contract is terminated for Owner's convenience, Contractor may recover from Owner payment for all Work executed. Contractor may not claim lost profits on other work or lost business opportunities.

14.6 Termination By Contractor. If the Work is stopped for a period of ninety (90) days under an order of any court or other public authority having jurisdiction, or as a result of an act of government, such as a declaration of a national emergency making materials unavailable, through no act or fault of Contractor or Subcontractor or their agents or employees or any other persons performing any of the Work under a contract with Contractor, then Contractor may, upon thirty (30) additional days written notice to ODR, terminate the Contract and recover from Owner payment for all Work executed, but not lost profits on other work or lost business opportunities. If the cause of the Work stoppage is removed prior to the end of the thirty (30) day notice period, Contractor may not terminate the Contract.

14.7 Settlement on Termination. When the Contract is terminated for any reason, at any time prior to one hundred eighty (180) days after the effective date of termination, Contractor shall submit a final termination settlement proposal to Owner based upon recoverable costs as provided under the Contract. If Contractor fails to submit the proposal within the time allowed, Owner may determine the amount due to Contractor because of the termination and pay the determined amount to Contractor.

Article 15. Dispute Resolution

15.1 Unresolved Contractor Disputes. The dispute resolution process provided for in Tex. Gov't Code, Ch. 2260 or Tex. Civ. Prac. & Rem. Code, Ch. 114, shall be used by Contractor to attempt to resolve any claim for breach of Contract made by Contractor that is not resolved under procedures described throughout the Uniform General Conditions, Supplementary Conditions, or Special Conditions of the Contract.

15.2 Alternative Dispute Resolution Process. Owner may establish a dispute resolution process to be utilized in advance of that outlined in Tex. Gov't Code, Ch. 2260 or Tex. Civ. Prac. & Rem. Code, Ch. 114.

15.3 Nothing herein shall hinder, prevent, or be construed as a waiver of Owner's right to seek redress on any disputed matter in a court of competent jurisdiction.

15.4 Nothing herein shall waive or be construed as a waiver of the State's sovereign immunity.

Article 16. Miscellaneous

16.1 Supplementary General and Special Conditions. When the Work contemplated by Owner is of such a character that the foregoing Uniform General Conditions of the Contract cannot adequately cover necessary and additional contractual relationships, the Contract may include Supplementary General and Special Conditions as described below:

16.1.1 Supplementary General Conditions may describe the standard procedures and requirements of contract administration followed by a contracting agency of the State. Supplementary General Conditions may expand upon matters covered by the Uniform General Conditions, where necessary, provided the expansion does not weaken the character or intent of the Uniform General Conditions. Supplementary General Conditions are of such a character that it is to be anticipated that a contracting agency of the State will normally use the same, or similar, conditions to supplement each of its several projects.

16.1.2 Special Conditions shall relate to a particular Project and be unique to that Project but shall not weaken the character or intent of the Uniform General Conditions.

16.2 Federally Funded Projects. On Federally funded projects, Owner may waive, suspend or modify any Article in these Uniform General Conditions which conflicts with any Federal statue, rule, regulation or procedure, where such waiver, suspension or modification is essential to receipt by Owner of such Federal funds for the Project. In the case of any Project wholly financed by Federal funds, any standards required by the enabling Federal statute, or any Federal rules, regulations or procedures adopted pursuant thereto, shall be controlling.

16.3 Internet-based Project Management Systems. At its option, Owner may administer its design and construction management through an Internet-based management system. In such cases, Contractor shall conduct communication through this media and perform

all Project related functions utilizing this database system. This includes correspondence, submittals, Requests for Information, vouchers or payment requests and processing, amendment, Change Orders and other administrative activities.

16.3.1 Accessibility and Administration.

16.3.1.1 When used, Owner will make the software accessible via the Internet to all Project team members.

16.3.1.2 Owner shall administer the software.

16.3.2 Training. When used, Owner shall provide training to the Project team members.

16.4 Administrative Inspections and Audits. Contractor agrees that all relevant records related to this Contract or any work product under this Contract, including practices of its Subcontractors, shall be subject, at any reasonable time, to inspection, examination, review, audit, and copying at any office or location of Contractor where such records may be found, with or without notice by the Texas State Auditor's Office ("SAO"), the contracting agency or its contracted examiners, or the Office of the Texas Attorney General, and with regard to any federal funding, the relevant federal agency, the Comptroller General, the General Accounting Office, the Office of the Inspector General, or any of their authorized representatives. All Subcontracts shall reflect the requirements of this section. In addition, pursuant to Tex. Gov't Code§ 2262.003 the SAO may conduct an audit or investigation of any entity receiving funds under this Contract, including direct payments to Contractor and indirect payments under a Subcontract to this Contract; acceptance of such monies acts as acceptance of SAO authority, under legislative audit committee direction, to audit and investigate related to those funds and the entity subject to the audit or investigation must provide SAO with access to any information SAO considers relevant to the scope of the audit or investigation.

16.4.1 Records for all contracts, specifically including but not limited to lump sum contracts (i.e. fixed price or stipulated sum contracts), unit price, cost plus or time & material contracts with or without a guaranteed maximum (or not-to-exceed amounts) shall upon reasonable notice be open to inspection and subject to audit, scanning, and/or reproduction during normal business working hours. Such audits may be performed by any Owner's representative or any outside representative engaged by Owner for the purpose of examining such records. The Owner or its designee may conduct such audits or inspections throughout the term of this contract and for a period of three years after final payment or longer if required by law. Owner's representatives may (without limitation) conduct verifications such as counting employees at the Construction Site, witnessing the distribution of payroll, verifying information and amounts through interviews and written confirmations with Contractor employees, field and agency labor, subcontractors, and vendors.

16.4.2 Contractor's "records" as referred to in this Article 16.4 shall include any and all information, materials and data of every kind and character, including without

limitation, records, books, papers, documents, subscriptions, recordings, agreements, purchase orders, leases, contracts, commitments, arrangements, notes, daily diaries, e-mails, superintendent reports, drawings, receipts, vouchers and memoranda, and any and all other agreements, sources of information and matters that may in Owner's judgment have any bearing on or pertain to any matters, rights, duties or obligations under or covered by any Contract Document. Such records shall include written policies and procedures; time sheets; payroll registers; payroll records; cancelled payroll checks; subcontract files (including proposals of successful and unsuccessful bidders, bid recaps, negotiation notes, etc.); original bid estimates; estimating work sheets; correspondence; change order files (including documentation covering negotiated settlements); back charge logs and supporting documentation; invoices and related payment documentation; general ledger, information detailing cash and trade discounts earned, insurance rebates and dividends; and any other contractor records which may have a bearing on matters of interest to Owner in connection with the contractor's dealings with Owner (all foregoing hereinafter referred to as "records") to the extent necessary to adequately permit evaluation and verification of any or all of the following:

- Compliance with contract requirements for deliverables.
- Compliance with approved plans and specifications.
- Compliance with Owner’s business ethics expectations.
- Compliance with contract provisions regarding the pricing of change orders.
- Accuracy of Contractor representations regarding the pricing of invoices.
- Accuracy of Contractor representations related to claims submitted by Contractor or any of its payees.

16.4.3 Contractor shall require all payees receiving $10,000 or more in connection with this contract (examples of payees include subcontractors, material suppliers, insurance carriers, etc.) to comply with the provisions of this article by including the requirements hereof in a written contract agreement between Contractor and payee. Contractor will ensure that all payees (including those entering into lump sum contracts) have the same right to audit provisions contained in this contract.

16.4.4 Owner’s authorized representative(s) shall have reasonable access to Contractor's facilities, shall be allowed to interview all current or former employees to discuss matters pertinent to the performance of this contract and shall be provided adequate and appropriate work space, to conduct audits in compliance with this article.

16.4.5 If an audit inspection or examination in accordance with this article, discloses overpricing or overcharges to Owner (of any nature) by Contractor and/or Contractor’s Subcontractors more than $100,000 in addition to making adjustments for the overcharges, the reasonable actual cost of Owner's audit shall be reimbursed to Owner by Contractor. Any adjustments and/or payments which must be made as a result of any such audit or inspection of Contractor's invoices and/or records shall be made within a reasonable amount of time (not to exceed 90 days) from presentation of Owner's findings to Contractor.

16.4.6 In addition, to the normal paperwork documentation Contractor typically furnishes to Owner, in order to facilitate efficient use of Owner resources when reviewing and/or auditing Contractor's billings and related reimbursable cost records, Contractor agrees to furnish (upon request) the following types of information in the specified computer (PC) readable file format(s):

Type of Record	PC Readable File Format
Monthly Job Cost Detail	.pdf and Excel
Detailed Job Cost History to Date	.pdf and Excel
Monthly Labor Distribution Detail (if not already separately detailed in Job Cost Detail)	.pdf and Excel
Total Job to Date Labor Distribution Detail (if not already included in the detailed Job Cost History to Date)	.pdf and Excel
Employee Timesheets documenting time worked by all individuals who charge reimbursable time to the project	.pdf
Daily Foreman Reports listing names and hours and tasks of personnel who worked on the project	.pdf
Daily Superintendent Reports	.pdf
Details Subcontract States Reports (showing original subcontract value, approved subcontract change orders, subcontractor invoices, payment to subcontractors, etc.)	.pdf and Excel
Copies of executed subcontracts with all subcontractors	.pdf
Copies of all executed change orders issued to subcontractors	.pdf
Copies of all documentation supporting all reimbursable job costs (subcontractor payment applications, vendor invoices, internal cost charges, etc.)	.pdf

End of Uniform General Conditions

EXHIBIT E

PREVAILING WAGE RATES

Stephen F. Austin State University
MINIMUM WAGE RATE DETERMINATION

Stephen F. Austin State University (SFA) is the contracting agency for this construction project. The following statute requires the contracting agency to specify the general minimum rates of wages in contracts that are bid.

Government Code 2258 "Construction of Public Works in State and Municipal or Political Subdivisions; Prevailing Wage Rates to be maintained"; and

The Uniform General and Supplementary General Conditions for Stephen F. Austin State University Construction Contracts.

Pursuant to the requirements of this statute, SFA has determined that the attached rates of wages are paid to various classifications of workers in Nacogdoches County. Total hourly compensations to each worker must equal or exceed the minimum wage rates stated in the "2015 SFA Prevailing Wage" attachment, Total Column. Contributions by worker toward health, pension, vacation, and the like are part of the worker's pay; contributions by the employer are not. Any dollar amounts shown in the column titled "Fringe" may be paid either in cash or in kind. Workers in classifications where rates are not identified shall be paid not less than the minimum rate of "General Laborer".

All hours of work over 40 hours per week are overtime and will be compensated at the rate of 1 and ½ times the regular wage.

A contractor who violates these prevailing wage rules shall be required to pay to SFA $60 for each worker employed for each calendar day or part of the day that worker is paid less than the wage rates stipulated by the contract.

Wage Rate Determination Appeal procedures can be found on the SFA website, http://www.sfasu.edu/purchasing/721.asp.

STEPHEN F. AUSTIN STATE UNIVERSITY

Physical Plant Department
P.O. Box 13031, SFA Station • Nacogdoches, Texas 75962-3031
Phone (936) 468-3906 • Fax (936) 468-4446

Worker Wage Rate Form

This form shall be used by all construction managers, contractors, sub-contractors engaged in the execution of SFA construction contracts in accordance with the Prevailing Minimum Wage Rate guidelines and the Uniform General and Supplementary Conditions. This completed notice must be delivered to the Physical Plant and accepted by all workers involved in the project prior to substantial completion or with pay applications. The employer shall submit separate Worker Wage Rate Forms for workers engaged in multiple classifications.

Physical Plant Project No. _____ Project Name_____

SECTION 1

Print entire form.

Employee Name: _____

Employer Name: _____

Worker Classification is shown on Prevailing Wage Rate Schedule: Yes ☐ No ☐

Worker Classification: _____
(Refer to Minimum Prevailing Wage Rate schedule contained within the Agreement for the project.)

	Hourly Rate
SFA Minimum Prevailing Wage Rate:	$_____
Actual Wage Rate:	$_____
Actual Employer Fringe Benefit Rate:	$_____

(Contributions by a worker toward health, pension, vacation and the like are a part of the Actual Wage Rate contributions by the Employer shown below.)

As the Employee Named Above, I hereby acknowledge receipt of this notice and by my signature below indicate my agreement with both the Classification of work I have been assigned on this project and to the proposed wages to be paid to me for such work.

Employee Signature: _____ Date: _____/_____/_____

SECTION 2

To the "Actual Wage Rate" above, the Employer shall indicate the total of all labor burden costs, Federal and State Unemployment, Social Security, Medicare, Health Insurance and Retirement.
(Burden does not include per diem, travel expense, small tools or other items. For clarification of items not listed contact Physical Plant Department, Construction Services.)

Hourly Burden Cost

$_____

Total Hourly Rate

Total Hourly Rate for Contract: Actual Wage Rate + Hourly Burden Cost $_____

Employer Signature or Seal: _____ Date: _____/_____/_____

2015 SFA Prevailing Wage Rate

Craft /Classification	Base	Fringe	Total
Glass Glazier	$12.00	$0.00	$12.00
Glass Common Laborer/Helper	$8.00	$0.00	$8.00
HVAC Journeyman Technician	$16.75	$0.00	$16.75
HVAC Common laborer/Helper	$9.00	$0.00	$9.00
Fencing Journeyman Installer	$14.00	$0.00	$14.00
Fencing Common Laborer/Helper	$9.00	$0.00	$9.00
Exavating/Dirtwork Backhoe Operator	$13.00	$0.50	$13.50
Exavating/Dirtwork Bulldozer Operator	$14.00	$0.00	$14.00
Exavating/Dirtwork Front End Loader Operator	$12.00	$0.00	$12.00
Exavating/Dirtwork Trackhoe Operator	$14.00	$0.00	$14.00
Exavating/Dirtwork Truck Driver	$13.00	$0.00	$13.00
Exavating/Dirtwork Common Laborer/Helper	$11.00	$0.00	$11.00
Asbestos Abatement Common Laborer/Helper	$10.00	$0.00	$10.00
Concrete Finisher	$12.50	$0.00	$12.50
Concrete Common Laborer/Helper	$10.00	$0.00	$10.00
Roofing Journeyman	$16.00	$0.00	$16.00
Roofing Common Laborer/Helper	$13.00	$0.00	$13.00
Insulation Insulator	$12.00	$0.00	$12.00
Insulation Common Laborer/Helper	$10.00	$0.00	$10.00
Drywall/ Metal Stud Installer	$14.00	$0.00	$14.00
Drywall Common Laborer/Helper	$10.00	$0.00	$10.00
Landscaping Journeyman	$12.00	$0.00	$12.00
Landscaping Foreman	$16.00	$2.51	$18.51
Landscaping Service Technician	$17.00	$2.67	$19.67
Landscaping Common Laborer/Helper	$10.00	$0.00	$10.00
Millwork Cabinet Maker	$16.00	$2.03	$18.03
Millwork Apprentice Carpenter	$15.00	$0.00	$15.00
Millwork Journeyman Carpenter	$16.00	$0.00	$16.00
Millwork Common Laborer/Helper	$9.00	$0.00	$9.00
Site Utilites Foreman	$18.00	$0.00	$18.00
Site Utilities Equipment Operator	$12.00	$0.00	$12.00
Site Utilities Truck Driver	$11.25	$0.00	$11.25
Site Utilities Journeyman	$11.00	$0.00	$11.00
Site Utilities Common Laborer/Helper	$8.50	$0.00	$8.50
Electrical Journeyman Electrician	$21.00	$0.00	$21.00
Electrical Common Laborer/Helper	$12.00	$1.17	$13.17
Plumbing Journeyman	$20.00	$0.00	$20.00
Plumbing Apprentice	$12.50	$2.50	$15.00
Plumbing Common Laborer/Helper	$8.00	$2.00	$10.00
Acoustical Ceiling Journeyman Installer	$13.00	$0.00	$13.00
Acoustical Ceiling Common Laborer/Helper	$9.00	$0.00	$9.00
Painting Journeyman Painter	$10.50	$1.37	$11.87
Lead Painter	$13.00	$0.00	$13.00

2015 SFA Prevailing Wage Rate

Craft /Classification	Base	Fringe	Total
Painting Common Laborer/Helper	$9.00	$0.00	$9.00
Steel Erection Journeyman/Iron Worker	$18.00	$0.00	$18.00
Steel Erection Truck Driver	$18.50	$0.00	$18.50
Steel Erection Ironworker - Structural	$20.00	$0.00	$20.00
Steel Erection Welder	$15.00	$0.00	$15.00
Steel Erection Common Laborer/Helper	$10.00	$0.00	$10.00
Flooring Journeyman Installer	$13.88	$2.19	$16.07
Floor Tile Setter	$20.00	$0.00	$20.00
Floor Layer	$18.00	$0.00	$18.00
Flooring Common Laborer/Helper	$9.00	$0.00	$9.00
Mason	$18.00	$0.00	$18.00
Masonry Common Laborer/Helper	$8.50	$0.00	$8.50
Mason Tender	$9.50	$0.00	$9.50
Asphalt/Paving Journeyman	$25.00	$0.00	$25.00
Asphalt/Paving Equipment Operator (Asphalt Pav	$15.00	$0.00	$15.00
Asphalt/Paving Common Laborer/Helper	$15.00	$0.00	$15.00
Asphalt/Paving Truck Driver	$15.00	$0.00	$15.00
Plastering/EIFS Laborer (Tender)	$11.00	$0.00	$11.00
Plastering/EIFS Journeyman	$16.00	$0.00	$16.00
Plasterer	$20.00	$0.00	$20.00
Fire Alarm Systems Low Voltage System Technicia	$20.10	$3.29	$23.39
Fire Alarm Systems Low Voltage System Helper (L	$12.00	$2.60	$14.60
Elevator Mechanic	$37.33	$0.00	$37.33
Elevator Helper	$18.67	$0.00	$18.67
Elevator Foreman	$42.00	$0.00	$42.00
Technology/Network Installer	$12.00	$3.00	$15.00
General Laborer	$9.00	$0.00	$9.00

EXHIBIT F

NON-COLLUSION AFFIDAVIT

EXHIBIT D
NON-COLLUSION AFFIDAVIT

The undersigned, duly authorized to represent the persons, firms and corporations joining and participating in the submission of the foregoing Proposal (such persons, firms and corporations hereinafter being referred to as the "Respondents"), being duly sworn, on his or her oath, states that to the best of his or her belief and knowledge no person, firm or corporation, nor any person duly representing the same joining and participating in the submission of the foregoing Proposal, has directly or indirectly entered into any agreement or arrangement with any other Respondent, or with any official of SFA or any employee thereof, or any person, firm or corporation under contract with SFA whereby the Respondent, in order to induce acceptance of the foregoing Proposal by said SFA, has paid or is to pay to any other Respondent or to any of the aforementioned persons anything of value whatsoever, and that the Respondent has not, directly or indirectly entered into any arrangement or agreement with any other Respondent or Respondent which tends to or does lessen or destroy free competition in the letting of the contract sought for by the foregoing Proposal.

The Respondent hereby certifies that neither it, its officers, partners, owners, providers, representatives, employees and/or parties in interest, including the affiant, have in any way colluded, conspired, connived or agreed, directly or indirectly, with any other Respondent, potential Respondent, firm or person, in connection with this solicitation, to submit a collusive or sham bid, to refrain from bidding, to manipulate or ascertain the price(s) of other Respondents or potential Respondents, or to obtain through any unlawful act an advantage over other Respondents or SFA.

The prices submitted herein have been arrived at in an entirely independent and lawful manner by the Respondent without consultation with other Respondents or potential Respondents or foreknowledge of the prices to be submitted in response to this solicitation by other Respondents or potential Respondents on the part of the Respondent, its officers, partners, owners, providers, representatives, employees or parties in interest including the affiant.

CONFLICT OF INTEREST

The undersigned Respondent and each person signing on behalf of the Respondent certifies, and in the case of a sole proprietorship, partnership or corporation, each party thereto certifies as to its own organization, under penalty of perjury, that to the best of their knowledge and belief, no member of SFA, nor any member of its Board of Regents, employee, or person whose salary is payable in whole or in part by SFA, has a direct or indirect financial interest in the award of the Proposal, or in the services to which this Proposal relates, or any of the profits, real or potential, thereof, except as noted otherwise herein.

Signature _____

Company name _____

Date_____

ITB/RFQ/RFP #PLAZA RENOVATION-2019 Opening date 12/04/2019 time 3:00 pm

NAME/ADDRESS	HUB
Asian Contractor Association Website: www.acta-austin.com Email: Phone: 512-926-5400 Fax: 512-926-5410	
Southwest Minority Supplier Development Council Website: www.smsdc.org Email: Phone: 512-386-8766 Fax: 512-386-8988	
Dallas/Fort Worth Minority Supplier Development Council Website: http://affiliate.nmsdc.org/dfwmsdc Email: Phone: 214-630-0747 Fax: 214-637-2241	
Houston Minority Supplier Development Council Website: www.hmsdc.org Contact: Jenera Thierry Email: Phone: 713-271-7805 Fax: 713-271-9770	
Tri-County Black Chamber of Commerce Website: http://www.tcbcc.org Email: Phone: 832-875-3977 Fax: 713-839-7329	
Women's Business Council – Southwest Website: http://www.wbcsouthwest.org Contact: Taylor Crosby Email: Phone: 817-299-0566	
Women's Business Enterprise Alliance Website: http://www.wbea-texas.org Email: Phone: 713-681-9232	
Golden Triangle Minority Business Council Website: www.gtmbc.com PH: 409-962-8530 FX: 409-722-5402	

ITB/RFQ/RFP # PLAZA RENOVATION-2019 Opening date 12/04/2019 time 3:00 pm

NAME/ADDRESS	HUB
Hispanic Contractors Association de San Antonio Website: www.hcadesa.org PH: 210-444-1100 FX: 210-444-1101	
US Pan Asian American Chamber of Commerce Website: www.uspaacc-sw.org PH: 682-367-1393 FX: 817-469-9485	
El Paso Hispanic Chamber of Commerce Website: www.ephcc.org PH: 915-566-4066 FX: 915-566-9714	
Regional Hispanic Contractors Association (RHCA) Website: www.tamacc.org PH: 972-786-0909 FX: 972-786-0910	
Texas Association of Mexican American Chambers of Commerce (TAMACC) Website: www.tamacc.org Contact: Pauline Anton Email: Phone: 512-444-5727	
Construction News Group	
Texas Association texo@texoassociation.org	
START SELECTED VENDORS HERE	
Timberline Constructors 3195 US Highway 69 N Lufkin, TX 75904-1081 PH: 936-637-2666 FX: 936-637-7980	
KDW PO Box 630632 Nacogdoches TX 75963 PH: 936-564-3329 FX: 936-569-7544	

ITB/RFQ/RFP # PLAZA RENOVATION-2019 Opening date 12/04/2019 time 3:00 pm

NAME/ADDRESS	HUB
Sandra J. Cox COX CONCRETE CONTRACTORS, PORATED P.O. BOX 631447 Nacogdoches TX 75963 PH: 936-564-6500	WO/F
Crockett Construction Inc. 1407 E Loop 304 Crockett, Tx 75835 PH: 936-554-2500	
R K Stephens Construction LLC Robert Stephens PO Box 265 Heidenheimer, TX 76533-0265 PH: 254-774-9199	WO/F
SpawGlass Construction Corp. Roger Berry 13800 West Road Houston, TX 77041 281-970-5300	
Webber Commercial Construciton, LLC Todd Granato 1725 Hughes Landing Blvd, Suite 1200 The Woodlands, TX 77380 281-907-8600	
Drewery, Inc. 902 SE Stallings Drive Nacogdoches, TX 75964 936-560-1534	
Janes Pavement Services, Inc. Ella L. Janes 62E Possum Walk Loop Huntsville, TX 77340 PH: 936-293-8581	WO/F
Precision Site Services LLC Delaina Lewis PO Box 681271 Houston, TX 77268-1271 281-580-1432	WO/F

ITB/RFQ/RFP # PLAZA RENOVATION-2019 Opening date 12/04/2019 time 3:00 pm

NAME/ADDRESS	HUB
Ben Reyna Contracting, Inc. Benjamin Reyna 5430 W US Highway 90 San Antonio, TX 78227-4219 PH: 210-372-0077	HI/M

Frontier Paving and Construction LLC Abraham Figueroa Jr 1716 N Port Ave Corpus Christi, TX 78404-1620 PH:361-510-0376	HI/M
Onsite Contracting LLC Rudy Rendon JR 4203 Gardendale St Suite C222 San Antonio, TX 78229 PH: 210-472-2345	HI/M
Tamex-Pearson Construciton, Inc. Noemi Tamez Pearson 11610 Coleta Creek Drive Corpus Christi, TX 78410 PH: 361-960-0993	HI/F
TDR Conctractors, Inc. John Dean PO Box 1003 Gilmer, TX 75644-1003 PH: 903-790-7615	